TM

GREAT DANE

Scamper Hydro
GLKW1536S
GLKW1748S

OPERATOR'S MANUAL

200466
06/21/06

North American Version
Litho in U.S.A.

WARNING: The Engine Exhaust from this product contains chemicals known to the State of California to cause cancer, birth defects or other reproductive harm.

California Proposition 65 Warning

Introduction

Using Your Operator's Manual

Use the safety and operating information in the attachment operator's manual along with the machine operator's manual to operate and service the attachment safely and correctly.

This operator's manual is an important part of your machine and should remain with the machine when you sell it.

Product Identification

Record Identification Numbers

Scamper Loop Handle

GLKW1536S (639110001-)

GLKW1736S (639210001-)

If you need to contact an Authorized Service Center for information on servicing, always provide the product model and serial numbers.

You will need to locate the model and serial numbers for the machine and for the engine of your machine and record the information in the spaces provided below.

DATE OF PURCHASE:

_____

DEALER NAME:

_____

DEALER PHONE:

_____

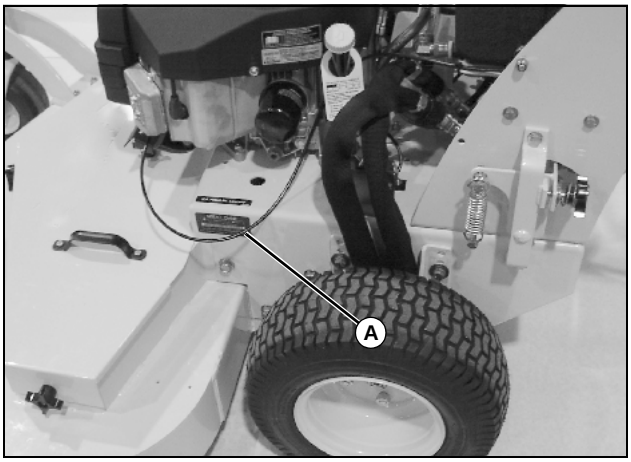

MX18563

MODEL NUMBER (A):

_ _ _ _ _ _ _ _ _ _ _ _ _ _ _ _ _ _

SERIAL NUMBER (POWER UNIT) (A):

_ _ _ _ _ _ _ _ _ _ _ _ _ _ _ _ _ _

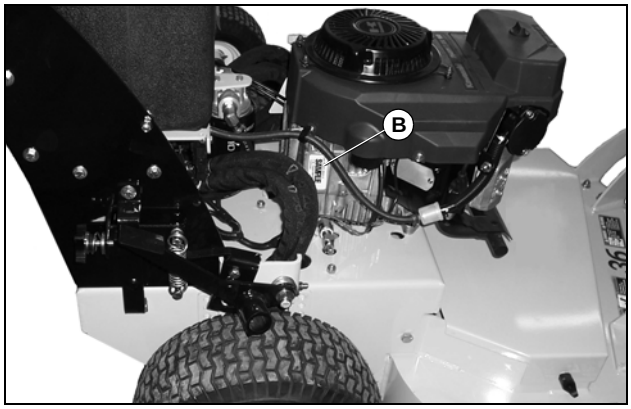

ENGINE MODEL NUMBER (B):

__ __ __ __ __ __ __ __ __ __ __ __ __ __ __ __ __

ENGINE SERIAL NUMBER (B):

__ __ __ __ __ __ __ __ __ __ __ __ __ __ __ __ __

ENGINE SPECIFICATION NUMBER (B):

__ __ __ __ __ __ __ __ __ __ __ __ __ __ __ __ __

Safety

Understanding The Machine Safety Labels

Safety-Alert Symbol

The machine safety labels shown in this section are placed in important areas on your machine to draw attention to potential safety hazards.

On your machine safety labels, the words DANGER, WARNING, and CAUTION are used with this safety-alert symbol. DANGER identifies the most serious hazards.

The operator's manual also explains any potential safety hazards whenever necessary in special safety messages that are identified with the word, CAUTION, and the safety-alert symbol.

Safety Label Locations

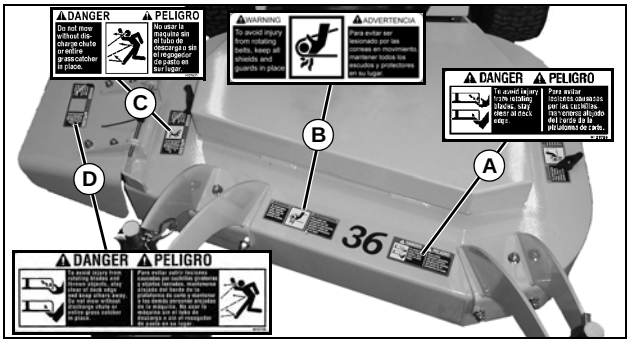

(A) DANGER

- Keep hands and feet away.

(B) CAUTION

- Do not operate mower without chute deflector, mulching plate or complete grass catcher assembly in position.
- Do not remove grass catcher, mulching plate or raise the chute deflector until engine and blade(s) have stopped.

(C) DANGER

- Do not mow without chute deflector, mulching plate or complete grass catcher assembly in position.

(D) DANGER

- To avoid injury from rotating blades and thrown objects, stay clear of the deck edge and keep others away. Do not mow without discharge chute or entire grass catcher in place.

CAUTION

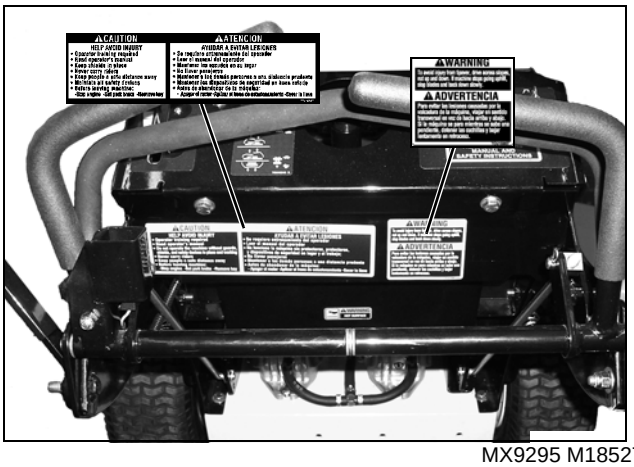

MX9295 M18527

- This product is designed for professional and commercial users.
- Operation training is required.
- Carefully read safety instructions.
- Know function of controls before operating.
- Practice with cutter blades off until confident.
- Clear mowing area of all debris.
- Keep all guards, covers and shields in place while working.
- Do not disable or bypass any safety device.
- Always wear safety goggles while operating.

- Always park machine on level surface.
- Avoid contact with cutter blades. They may be rotating.
- Keep children and others clear from area.
- Set ground speed control to safe speed.
- Slowly and smoothly move speed control levers to start and stop machine.
- Reduce speed and avoid sharp turns.
- Always hold on to safety bar while operating.
- Be careful on slopes, do not mow where stability or traction is in doubt.
- To obtain additional operator manual's, log onto www.greatdanemowers.com and download them free of charge.

Emission Control System Certification Label

NOTE: Tampering with emission controls and components by unauthorized personnel may result in severe fines or penalties. Emission controls and components can only be adjusted by EPA and/or CARB authorized service centers. Contact your Great Dane Commercial and Consumer Equipment Retailer concerning emission controls and component questions.

The presence of an emissions label signifies that the engine has been certified with the United States Environmental Protection Agency (EPA) and/or California Air Resources Board (CARB).

Emission Compliance Period

If your engine has the emission compliance category listed on the emission control system certification or air index label, this indicates the number of operating hours for which the engine has been certified to meet EPA and/or CARB emission requirements. The following table provides the engine compliance period in hours associated with the category found on the certification label.

Agency	Category	Hours
EPA	C	250
EPA	B	500
EPA	A	1000
CARB	Moderate	125
CARB	Intermediate	250
CARB	Extended	500

Operating Safely

- Only allow responsible adults, who are familiar with the instructions to operate the machine. Local restrictions may restrict the age of the operator.
- Inspect machine before you operate. Be sure hardware is tight. Repair or replace damaged, badly worn, or missing parts. Replace faulty silencers. Be sure guards and shields are in good condition and fastened in place. Make any necessary adjustments before you operate.
- Before using, always visually inspect to see that the blades, blade bolts and the mower assembly are not worn and damaged. Replace worn and damaged blades and bolts in sets to preserve balance.
- Be sure all drives are in neutral and parking brake is locked before starting engine. Only start engine from the operator's position.
- Do not change the engine governor settings or overspeed the engine. Operating the engine at excessive speed can increase the hazard of personal injury.
- Do not operate mower without discharge chute or entire grass catcher in place. Never operate with the discharge deflector raised, removed, or altered, unless using a grass catcher.
- Check brake action before you operate. Adjust or service brakes as necessary.
- Stop machine if anyone enters the area.
- If you hit an object or if abnormal vibration occurs, stop the machine and inspect it. Make repairs before you operate. Keep machine and attachments properly maintained and in good working order.
- Be aware of the mower discharge direction and make sure that no one is in the path of the discharge direction.
- Do not leave machine unattended when it is running.
- Only operate during daylight or with good artificial light.
- Stop the blades rotating before crossing surfaces other than grass.
- Use only accessories and attachments approved by the manufacturer of the machine. Keep safety labels visible when installing accessories and attachments.
- Do not operate machine if you are under the influence of drugs or alcohol.
- Check before each use that operator presence controls are functioning correctly. Test safety systems. Do not operate unless they are functioning correctly.
- Always wear seat belt if machine has a standard ROPS or a folding ROPS in the upright position.
- Never raise mower decks when blades are running.
- Slow down and be careful of traffic when operating near or crossing roadways. Stop blades before crossing roads or sidewalks. Use care when approaching blind corners, shrubs, trees, or other objects that may obscure vision.
- Do not wear radio or music headphones. Safe service and operation require your full attention.
- Disengage drive to attachments when transporting or not in use.
- Reduce the throttle setting during engine run-out and, if the engine is provided with a fuel shut-off valve, turn the fuel off at the conclusion of mowing.
- When machine is left unattended, stored, or parked, lower the mower deck unless a positive mechanical lock is used.

Using a Spark Arrestor

The engine in this machine is not equipped with a spark arrestor muffler. It is a violation of California Public Resource Code Section 4442 to use or operate this engine on or near any forest-covered, brush-covered or grass-covered land unless the exhaust system is equipped with a spark arrestor meeting any applicable local or state laws. Other states or federal areas may have similar laws.

A spark arrestor for your machine may be available from your authorized dealer. An installed spark arrestor must be maintained in good working order by the operator.

Checking Mowing Area

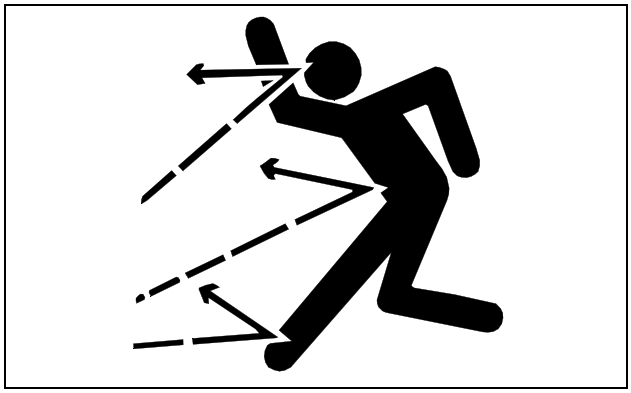

MIF

- Evaluate the terrain to determine what accessories and attachments are needed to properly and safely perform the job.
- Clear mowing area of objects that might be thrown. Keep people and pets out of mowing area.
- Low-hanging branches and similar obstacles can injure the operator or interfere with mowing operation. Before mowing, identify potential obstacles such as low-hanging branches, and trim or remove those obstacles.
- Study mowing area. Set up a safe mowing pattern. Do not mow where traction or stability is doubtful.
- Test drive area with mower lowered but not running. Slow down when you travel over rough ground.

Parking Safely

1.Stop machine on a level surface, not on a slope.

2.Disengage mower blades or any other attachments.

3.Lower attachments to the ground.

4.Lock the park brake.

5.Stop the engine.

6.Remove the key.

7.Wait for engine and all moving parts to stop before you leave the operator's seat.

8.Close fuel shut-off valve, if your machine is equipped.

9.Disconnect the negative battery cable or remove the spark plug wire (for gasoline engines) before servicing the machine.

Rotating Blades are Dangerous

HELP PREVENT SERIOUS OR FATAL ACCIDENTS:

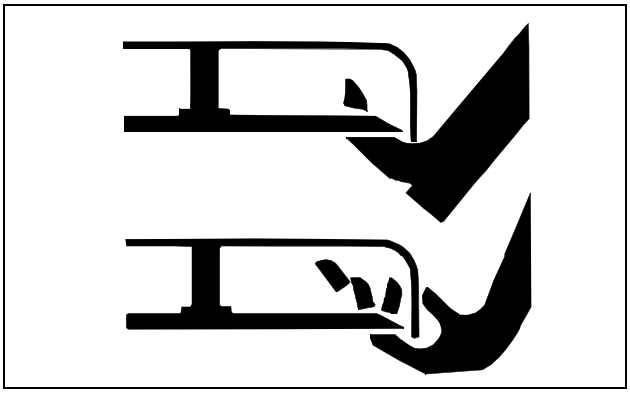

- Rotating blades can cut off arms and legs, and throw objects. Failure to observe safety instructions could result in serious injury or death.
- Keep hands, feet and clothing away from mower deck when engine is running.
- Be alert at all times, drive forward carefully. People, especially children can move quickly into the mowing area before you know it.
- Before backing up, stop mower blades or attachments and look down and behind the machine carefully, especially for children.
- Do not mow in reverse.
- Shut off blades when you are not mowing.
- Park machine safely before leaving the operator's station for any reason including emptying the catchers or unplugging the chute.

PROTECT CHILDREN:

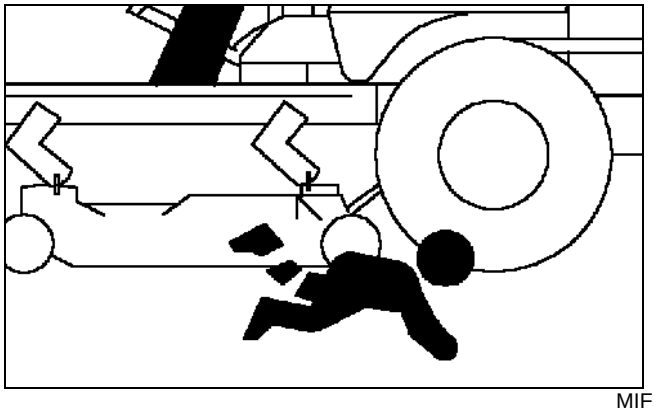

MIF

- Tragic accidents can occur if the operator is not alert to the presence of children. Keep children out of the mowing area and under the watchful care of another responsible adult.
- Never assume that children will remain where you last saw them. Children are attracted to mowing activity, stay alert to the presence of children.
- Keep children indoors when you are mowing. Turn the machine off if a child enters the mowing area.
- Do not let children or an untrained person operate the machine.
- Do not carry or let children ride on any attachment or machine even with the blades off. Do not tow children in a cart or trailer.

Avoid Tipping

- Slopes are a major factor related to loss-of-control and tip-over accidents, which can result in severe injury or death.
- Drive across a hill - not up and down. If necessary, turn slowly and in the downhill direction. Do not shift to neutral and coast downhill.
- Avoid starting and stopping on a slope. If machine stops, disengage mower blades and back down slowly.
- Do not drive where machine could slip or tip.
- Stay alert for holes and other hidden hazards in the terrain.
- Keep away from drop-offs, ditches, and embankments.
- Slow down before you make a sharp turn or operate on a slope.
- Mowing when grass is wet can cause reduced traction and sliding.

Keep Riders Off

- Only allow the operator on the machine. Keep riders off.
- Riders on the machine or attachment may be struck by foreign objects or thrown off the machine causing serious injury.
- Riders obstruct the operator's view resulting in the machine being operated in an unsafe manner.

Checking Wheel Bolts

- A serious accident could occur causing serious injury if wheel bolts are not tight.
- Check wheel bolt tightness often during the first 100 hours of operation.
- Wheel hardware must be tightened to specified torque using the proper procedure anytime it is loosened.

Practice Safe Maintenance

MIF

- Only qualified, trained adults should service this machine.
- Understand service procedure before doing work. Keep area clean and dry.
- Do not operate the engine in a confined space where dangerous carbon monoxide fumes can collect.
- Never lubricate, service, or adjust machine while it is moving. Wait for all movement to stop on machine before adjusting, cleaning or repairing.
- Keep safety devices in place and in working condition. Keep hardware tight.
- On multi-bladed machines, take care as rotating one blade can cause other blades to rotate.
- Keep hands, feet, clothing, jewelry, and long hair away from any moving parts, to prevent them from getting caught.
- Lower attachments to the ground before cleaning or servicing machine. Disengage all power and stop the engine. Lock park brake and remove the key. Let machine cool.
- Disconnect battery or remove spark plug wire (for gasoline engines) before making any repairs.
- Before servicing machine, carefully release pressure from any components with stored energy, such as hydraulic components.
- Keep all nuts and bolts tightened, especially blade attachment bolts.
- Securely support any machine elements that must be raised for service work. Use jack stands or lock service latches to support components when needed.
- Never run engine unless park brake is locked.
- Use care when checking blades. Wrap blades or wear gloves and use caution when servicing them. Only replace blades. Never straighten or weld them.
- Keep all parts in good condition and properly installed. Fix damage immediately. Replace worn or broken parts. Replace all worn or damaged safety and instruction decals.
- Grass catcher components are subject to wear, damage, and deterioration which could expose moving parts or allow objects to be thrown. Check components frequently and replace with manufacturer's recommended parts when necessary.
- Charge batteries in an open, well-ventilated area, away from sparks. Unplug battery charger before connecting or disconnecting from the battery. Wear protective clothing and use insulated tools.
- Do not modify machine or safety devices. Unauthorized modifications may impair its function and safety.
- Check brake operation frequently. Adjust and service as needed.

Prevent Fires

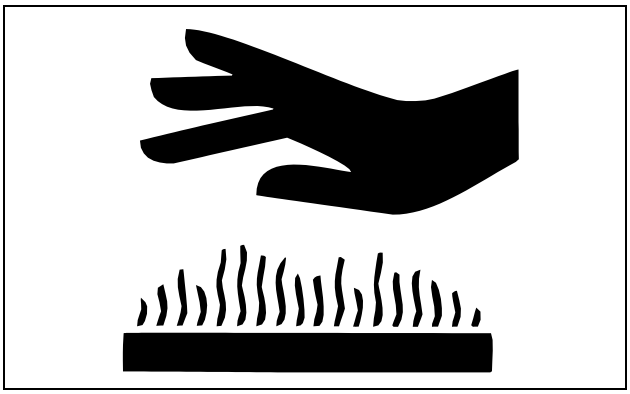

- Remove grass and debris from engine compartment and muffler area, before and after operating machine, especially after mowing or mulching in dry conditions.
- To reduce fire hazard, keep engine and engine compartment free of grass, leaves, or excessive grease.
- Clean up oil or fuel spillage.
- Allow engine to cool before storing in any enclosure.
- Never remove fuel cap, or add fuel with engine running or hot. Allow engine to cool for several minutes.
- Never store equipment with fuel in the tank inside a building where fumes may reach an open flame or spark.

• Always shut off fuel when storing or transporting machine.

Tire Safety

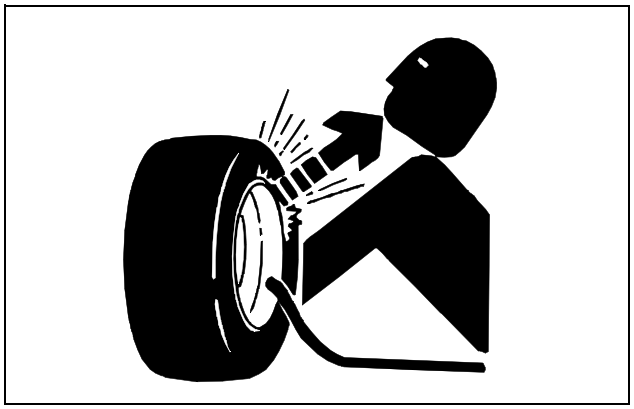

Explosive separation of a tire and rim parts can cause serious injury or death:

• Do not attempt to mount a tire without the proper equipment and experience to perform the job.

• Always maintain the correct tire pressure. Do not inflate the tires above the recommended pressure. Never weld or heat a wheel and tire assembly. The heat can cause an increase in air pressure resulting in a tire explosion. Welding can structurally weaken or deform the wheel.

• When inflating tires, use a clip-on chuck and extension hose long enough to allow you to stand to one side and NOT in front of or over the tire assembly.

• Check tires for low pressure, cuts, bubbles, damaged rims or missing lug bolts and nuts.

Handling Fuel Safely

Fuel and fuel vapors are highly flammable:

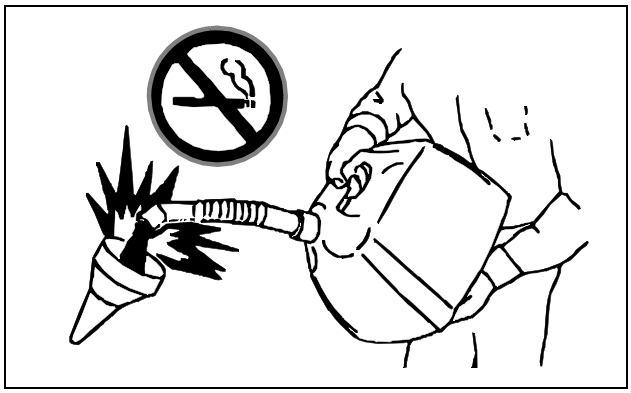

• Do not refuel machine while you smoke, when machine is near an open flame or sparks, or when engine is running. Stop engine and allow to cool before filling.

• Never remove the fuel cap or add fuel with the engine running.

• Replace all fuel tanks and container caps securely.

• Never fill fuel tank or drain fuel from a machine in an enclosed area. Fill fuel tank outdoors.

• Prevent fires. Clean up spilled fuel immediately. If fuel is spilled on clothing, change clothing immediately. Do not attempt to start the engine but move the machine away from the area of spillage and avoid creating any source of ignition until fuel vapors have dissipated.

• Do not store fuel in container or machine with fuel in tank in a building where fumes may reach an open flame or spark.

• Prevent fire and explosion caused by static electric discharge. Use only non-metal, portable fuel containers approved by the Underwriter's Laboratory (U.L.) or the American Society for Testing & Materials (ASTM). If using a funnel, make sure it is plastic and has no screen or filter.

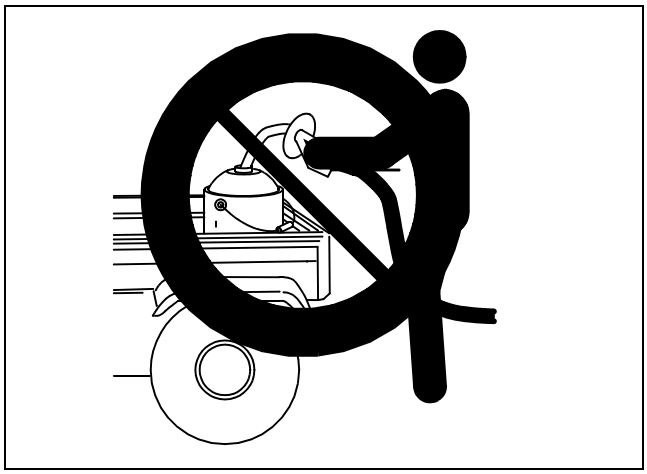

• Static electric discharge can ignite gasoline vapors in an ungrounded fuel container. Remove the fuel container from the bed of a machine or trailer or the trunk of a car and place on the ground away from the machine before filling. Keep nozzle in contact with container opening while filling. Do not use a nozzle lock-open device.

• When practical, remove equipment from trailers or truck beds and refuel them on the ground. If this is not possible, use a portable, plastic fuel container to refuel equipment on a truck bed or trailer.

• For gasoline engines, do not use gas with methanol. Methanol is harmful to your health and to the environment.

Handling Waste Product and Chemicals

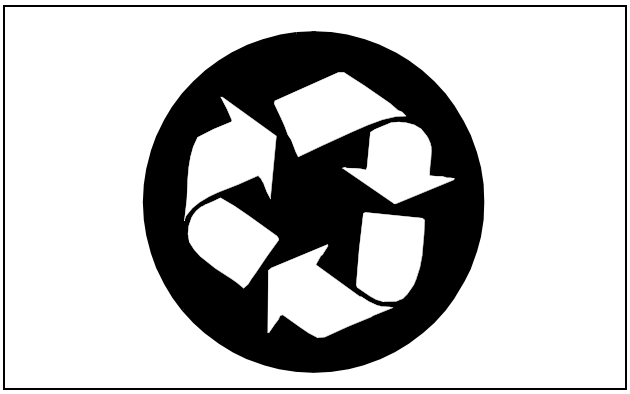

Waste products, such as, used oil, fuel, coolant, brake fluid, and batteries, can harm the environment and people:

• Do not use beverage containers for waste fluids - someone may drink from them.

• See your local Recycling Center or authorized dealer to learn how to recycle or get rid of waste products.

• A Material Safety Data Sheet (MSDS) provides specific details on chemical products: physical and health hazards, safety procedures, and

emergency response techniques. The seller of the chemical products used with your machine is responsible for providing the MSDS for that product.

Operating

Daily Operating Checklist

O Remove mower deck belt shields. Clean grass and debris from belt area.

O Remove grass and debris from machine and mower deck.

O Make sure all necessary guards and shields are safely and securely attached. Check for loose, missing, or damaged parts.

O Test park brake.

O Test safety systems.

O Inspect for oil leaks.

O Check engine and hydraulic oil levels.

O Inspect all belts for damage or cracking.

O Inspect engine air filter.

O Inspect mower level

O Adjust cutting height if necessary.

O Inspect wheel bolt torque. Tighten if necessary.

O Check tire air pressure. Check tires for damage or cracking.

O Inspect front caster spindles/wheels.

Console Controls

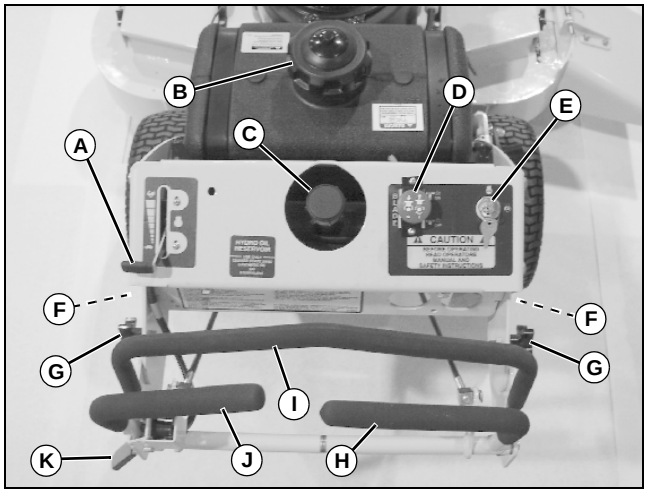

MX18565

A- Throttle Lever/Choke Control (choke may be individual control on some models)
B- Fuel Fill
C- Hydraulic Oil Reservoir Fill
D- PTO/Clutch Switch
E- Key Switch
F- Neutral Adjustment Knob (2 used)
G- Control Height Knob (2 used)
H- Right Control Lever
I - Speed Control/Safety Bar
J - Left Control/Operator Presence Lever
K- Speed Control Adjustment Lock

Miscellaneous Controls

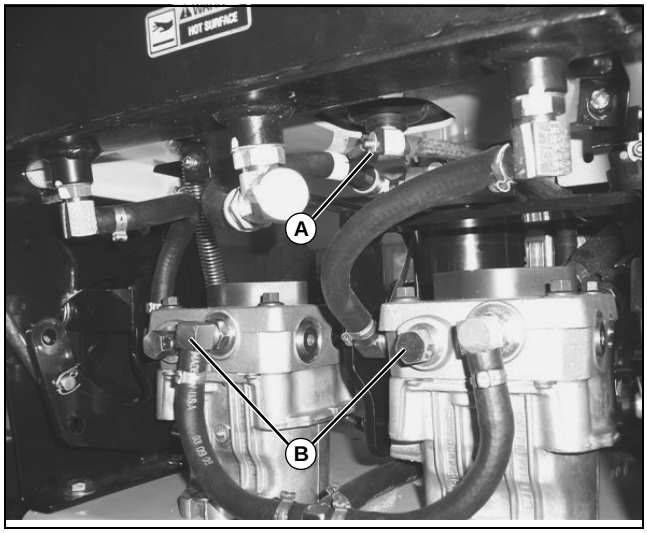

MX18524

A- Fuel Shutoff Valve
B- Bypass/Push Valves

Testing Safety Systems

CAUTION: Avoid injury! Engine exhaust fumes contain carbon monoxide and can cause serious illness or death.

Move the machine to an outside area before running the engine.

Do not run an engine in an enclosed area without adequate ventilation.

- **Connect a pipe extension to the engine exhaust pipe to direct the exhaust fumes out of the area.**
- **Allow fresh outside air into the work area to clear the exhaust fumes out.**

The safety systems installed on your machine should be checked before each machine use. Be sure you have read the machine operator manual and are completely familiar with the operation of the machine before performing these safety system checks.

Use the following checkout procedures to check for normal operation of machine.

If there is a malfunction during one of these procedures, do not operate machine. **See your authorized dealer for service.**

Perform these tests in a clear open area. Keep bystanders away.

Testing Operator Presence Safety Interlock System

1. Start engine.
2. Unlock park brake.
3. Move throttle to mid open position.
4. Move left control lever in to engage the operator presence switch.
5. Move PTO/clutch switch to on position.

Result: Mower deck should engage.

CAUTION: Avoid injury! Keep bystanders away. The mower will begin as soon as the left control lever is moved in.

6.Release left control lever to disengage the operator presence safety switch.

Result: The mower deck must stop.

Testing the PTO/Clutch Safety Switch

1.Lock the park brake.

2.Move the control levers to the neutral position and release the left control lever.

3.Move the PTO/clutch switch to the on position.

4.Turn the key to the on position and pull recoil starter.

Result: The engine must not start.

Testing Park Brake

Stop the machine on a maximum 17° slope. Stop the engine and lock the park brake.

Result: Park brake must hold the machine stationary. If the machine moves more than 61 cm [24 in.] in one hour, brake needs to be adjusted. See your Great Dane dealer.

Using the Park Brake

1.To lock brake, press pedal firmly until it locks into place.

2.To unlock, push pedal and lock lever at the same time.

Starting the Engine

CAUTION: Avoid injury! Engine exhaust fumes contain carbon monoxide and can cause serious illness or death.

Move the vehicle to an outside area before running the engine.

Do not run an engine in an enclosed area without adequate ventilation.

- **Connect a pipe extension to the engine exhaust pipe to direct the exhaust fumes out of the area.**
- **Allow fresh outside air into the work area to clear the exhaust fumes out.**

1.Open the fuel shutoff valve.

2.Adjust the safety bar halfway back and tighten the right side lever for moderate mowing speed.

3.Lock park brake.

4.Move PTO/clutch switch to off position.

5.Move throttle lever to half-speed position. (full detent for integrated choke models)

6.Adjust choke as required.

7.Turn key switch to run position. Pull recoil starter until the engine starts.

IMPORTANT: Avoid damage! Unnecessary engine idling may cause engine damage. Excessive idling can cause engine overheating, carbon build-up and poor performance.

8. Let the engine run at half-speed position for several minutes to warm-up, before operating the machine. Reduce choke setting as the engine warms up.

Stopping the Engine

1.Move the throttle lever to the slow idle position, and let the engine run at that speed for a few seconds.

2.Turn the key switch to the stop position.

3.Remove key.

4.Lock park brake.

Operating the Machine

CAUTION: Avoid injury! Learn the use of the control levers. Practice at half throttle until becoming proficient and comfortable with the operation of the machine.

Do not move control levers from forward to reverse or reverse to forward position rapidly. Sudden direction changes could cause loss of control or damage the machine.

1.Adjust mower deck to desired cutting height.

2.Start and warm up engine.

3.Unlock park brake.

4.Move throttle lever to fast idle.

5.Move PTO/clutch switch to on position.

6.Move the left control lever in to engage the operator presence safety switch.

7.Grasp safety bar.

NOTE: The travel speed and turn rate will vary with the amount that the control levers are moved.

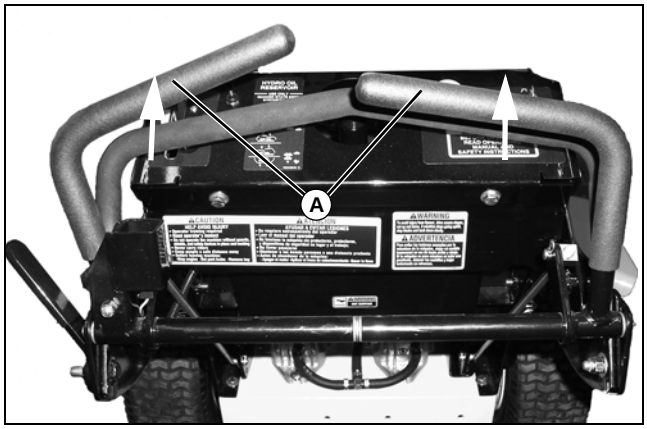

MX18565

8.Drive the machine:

To drive the machine forward: Push both control levers (A) forward smoothly and evenly.

To turn the machine: Pull the control lever back on the same side as the direction of the desired turn. Push the other lever forward.

To stop the machine: Allow both control levers to return to the neutral position.

To drive the machine in reverse: Pull both control levers back evenly.

Stopping the Machine

CAUTION: Avoid injury! Children or bystanders may attempt to move or operate an unattended machine.

Always lock the park brake and remove the key before leaving the machine unattended.

1.Allow both control levers to return to the neutral position.

2.Move the PTO/clutch switch to the off position.

3.Move the throttle lever to the slow idle position, and let the engine run at that speed for a few seconds.

4.Turn the key switch to the stop position.

5.Lock park brake.

6.Remove key.

NOTE: For emergency stop of blades and unit drive, release operator presence control levers.

Adjusting Cutting Height

Cutting height can be adjusted from approximately 38-139 mm (1-1/2 - 5-1/2 in.). Each hole adjusts the height of cut (HOC) in 12 mm (1/2 in.) increments.

1.Check tire pressure. Inflate front caster wheels to 172-207 kPa (25-30 psi). Inflate rear tires to 69-83 kPa (10-12 psi).

CAUTION: Avoid injury! Machine must be safely supported on jackstands before removing or installing wheels. Do not use a hoist or floor jack to support the machine.

2.Using a suitable lifting device, lift the rear of the machine.

3.Remove rear wheels.

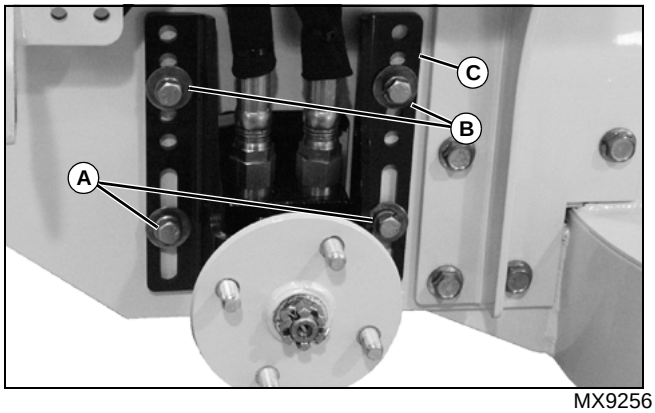

MX9256

4.Loosen bolts (A).

5.Loosen and remove bolts (B).

6.Move wheel motor slide bracket (C) up or down to desired height and tighten bolts (A) to 47-54 N•m (35-40 lb-ft).

7.Insert bolts (B) into holes and tighten to 47-54 N•m (35-40 lb-ft).

8.Install wheels and place machine back on ground.

9.Using a suitable lifting device, lift the front of the machine.

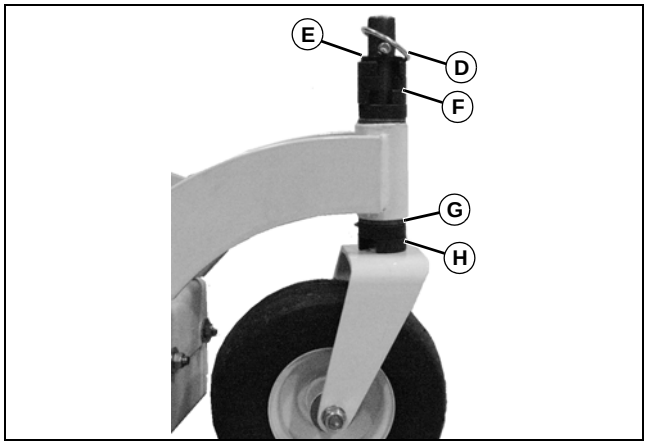

MX9257

10.Remove lynch pin (D) and spacer bushing (E).

IMPORTANT: Avoid damage! Do not allow washer (G) to set on caster yoke. It must be on top of height-of-cut spacer bushings (H).

NOTE: Adjust caster wheel spacers to keep mower deck tilted slightly down at the front.

11.Adjust caster wheel spacers (F) to compensate front HOC accordingly.

Using the Fuel Shutoff Valve

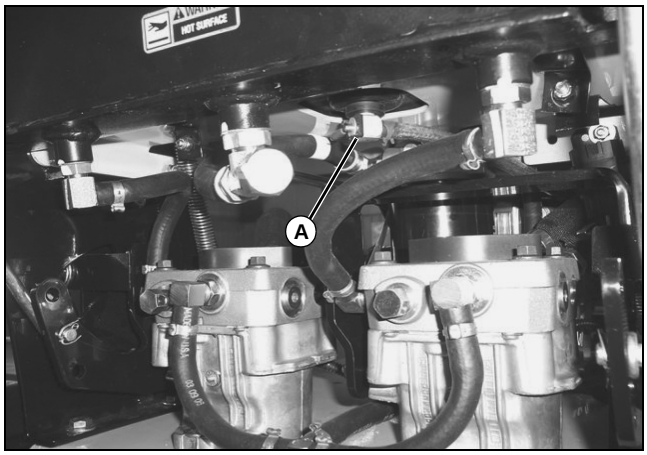

MX18524

Move the fuel shutoff valve (A) to the on position for normal operation. Move the fuel shutoff valve to the off position when the machine is not in use, transported or trailered.

Moving the Machine Manually

CAUTION: Avoid injury! With the free-wheeling valve open, the machine will have unrestricted motion.

- **The machine may free-wheel out of control if the free-wheeling valve is opened with the machine on an incline.**
- **Park the machine on a level surface before opening the free-wheeling valve.**

IMPORTANT: Avoid damage! Transmission damage may occur if the machine is moved or towed incorrectly:

- **Move unit by hand only.**
- **Do not use another vehicle to move unit.**
- **Do not tow unit.**

1.Park machine safely. (See Parking Safely in the Safety section.)

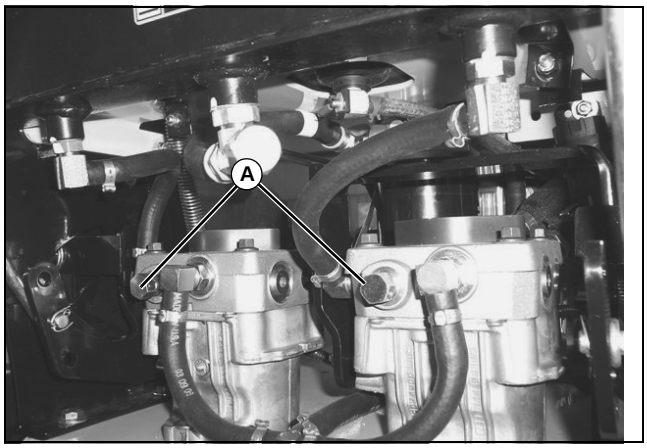

MX18524

2.Turn free-wheeling valves (A) one full turn counterclockwise (open position).

3.Unlock park brake.

4.Push machine to desired location. Due to internal hydraulic system resistance, the machine will move slowly.

5.Turn free-wheeling valves one full turn clockwise (closed position). Tighten valve to 11 N•m (100 lb-in).

6.Lock park brake.

Service Intervals

Servicing Your Machine

IMPORTANT: Avoid damage! Operating in extreme conditions may require more frequent service intervals:

- **Engine components may become dirty or plugged when operating in extreme heat, dust or other severe conditions.**
- **Engine oil and spark plugs may lose efficiency if vehicle is operated constantly at slow or low engine speeds or with frequent short trips.**

Please use the following timetables to perform routine maintenance on your machine.

NOTE: The following initial break-in items must be performed and verified to validate the warranty (dealer service invoice accepted).

Break-In (After First 8 Hours of Operation)

Change engine oil and filter.

Check drive belt tension.

Check mower deck drive belt tension (36-Inch Mower Deck).

Check engine-to-deck drive belt tension (48-Inch Mower Deck).

Check spindle drive belt tension (48-Inch Mower Deck).

Check transmission neutral adjustment.

Check wheel nut torque.

Check and adjust (as needed) park brake.

Remove debris from the underside of the mower deck.

Every 25 Hours or Weekly (Whichever Comes First)

Grease spindle bearings (three places).

Lubricate front caster wheels.

Lubricate front caster wheel spindles.

Remove debris from the underside of the mower deck.

Every 50 Hours or Weekly (Whichever Comes First)

Change engine oil and filter. See the engine manufacturer's owner's manual provided with your machine for the complete procedure.

Grease caster wheel spindle bearings (two places).

Remove debris from the underside of the mower deck.

Check drive belt tension.

Check tire pressure.

Clean engine air filter.

Check wheel nut torque.

Every 160 Hours or Monthly (Whichever Comes First)

Check transmission oil level.

Spray lubricate mower deck idler pulley pivots.

Spray lubricate pump control linkage.

Spray lubricate control lever pivot shafts (two places).

Spray lubricate throttle cable.

Spray lubricate choke control cable.

Annually

Inspect all spindle bearings (4). Replace as needed.

Inspect all mower deck idler pulleys. Replace as needed.

Remove and inspect caster wheel roller bearings; clean and pack with grease. Replace as needed.

Inspect drive belts. Replace as needed. Run-in and adjust tension.

Clean power unit.

Check all bolts and nuts; tighten as needed.

Replace spark plugs.

Service Lubrication

Grease

IMPORTANT: Avoid damage! If operating outside that temperature range, contact your Servicing dealer for a special-use grease.

Use a general all-purpose grease with an NLGI grade No.2 rating.

Wet or high speed conditions may require use of a special-use grease. Contact your Servicing dealer for information.

Spray Lubricant

Use a general-purpose petroleum-based spray lubricant.

Lubrication Points

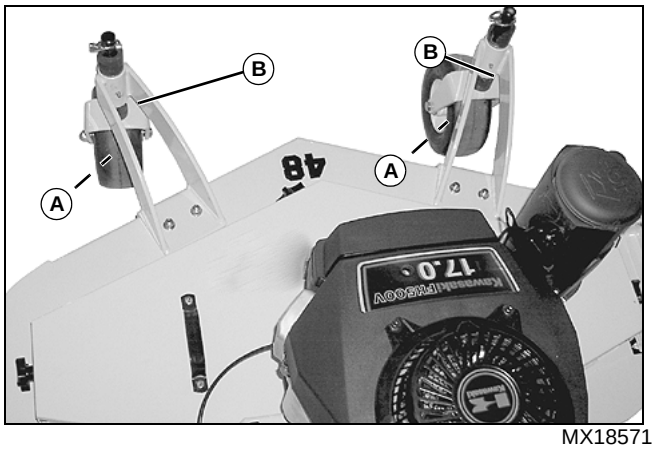

MX18571

- Grease caster wheel bearings (A).
- Grease caster wheel pivot bushings (B).

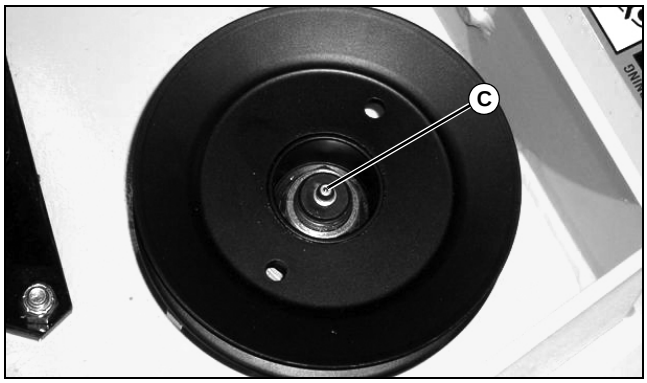

MX15287

- Apply grease to three spindle bearings (C), until grease is expelled from vent on spindle housings.

NOTE: Use spray lubricant to lubricate the following items:

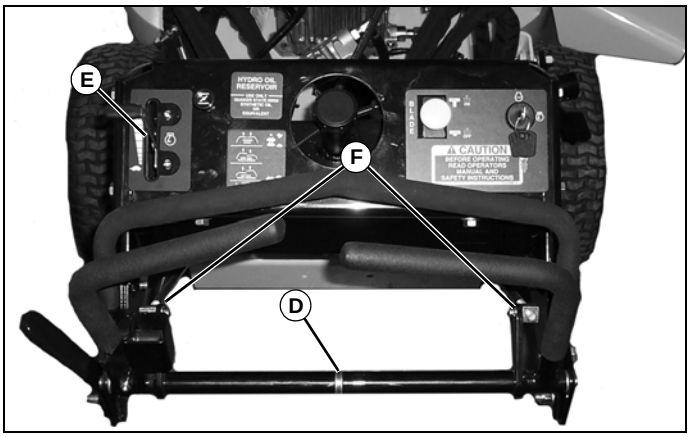

MX18565

- Spray lubricate speed control levers pivot shaft (D).
- Spray lubricate throttle control cable (E).
- Spray lubricate choke control cable if independent.
- Spray lubricate hydro pump lower control linkages (F) on both sides.

Service Engine

Avoid Fumes

CAUTION: Avoid injury! Engine exhaust fumes contain carbon monoxide and can cause serious illness or death.

Move the machine to an outside area before running the engine.

Do not run an engine in an enclosed area without adequate ventilation.

- **Connect a pipe extension to the engine exhaust pipe to direct the exhaust fumes out of the area.**
- **Allow fresh outside air into the work area to clear the exhaust fumes out.**

Engine Oil

Use oil viscosity based on the expected air temperature range during the period between oil changes.

Use oil that meets the following specification:

- See the engine manufacturer's owner's manual provided with your machine for the correct specifications.

Checking Engine Oil Level

IMPORTANT: Avoid damage! Failure to check the oil level regularly could lead to serious engine problems if oil level is low:

- **Check oil level before operating.**
- **Check oil level when the engine is cold and not running.**
- **Keep level between the FULL and the ADD marks.**
- **Shut off engine before adding oil.**

NOTE: Check oil twice a day if the engine runs over four hours in a day.

Make sure engine is cold when checking engine oil level.

1.Park machine safely. (See Parking Safely in the Safety section.)

2.Allow engine to cool.

MX18572

3.Clean area around dipstick (A) to prevent debris from falling into crankcase.

4.Remove dipstick. Wipe with a clean cloth.

5.Install dipstick and allow the cap to rest on the end of the tube. Do not tighten the cap.

IMPORTANT: Avoid damage! To prevent extensive engine wear or damage, always maintain the proper engine oil level. Never operate the engine with the oil level below the ADD mark or over the FULL mark.

6.Remove dipstick and check oil level on dipstick. Oil must be between the ADD and FULL marks.

- If oil is low, add oil to bring oil level no higher than the FULL mark on dipstick.
- If oil level is above the FULL mark, drain to proper level.

7.Install and tighten dipstick.

Changing Engine Oil and Filter

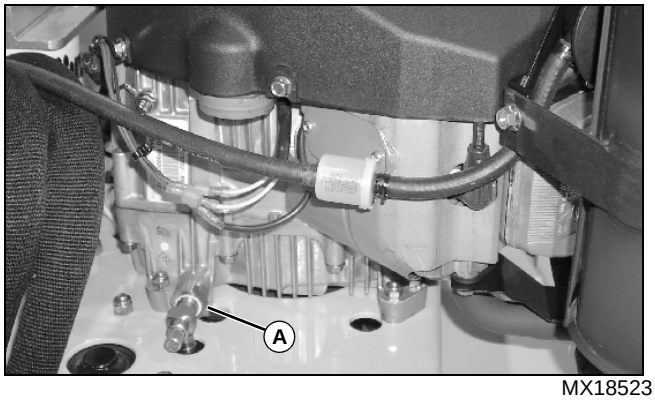

MX18523

NOTE: An oil drain tube is provided with this machine. Attach the tube to the oil drain fitting on the engine, and open valve (A) to drain the used oil. Close the valve, and remove the drain tube from the fitting after the oil has been drained. Store the drain tube after use.

Change engine oil and filter at the intervals recommended in the Service Intervals section. See the engine manufacturer's owner's manual provided with your machine for the complete procedure.

Cleaning Air Intake Screen and Engine Fins

IMPORTANT: Avoid damage! The engine is air-cooled and requires a large amount of air intake when running. Reduced air intake can cause overheating:

- **Keep air intake screen and cooling fins clean.**
- **Keep covers and screens in place.**

Keep air intake screens and engine cooling fins clear of debris to ensure proper cooling. See the engine manufacturer's owner's manual provided with your machine for the complete procedure.

Checking and Cleaning Air Filter Elements

CAUTION: Avoid injury! Touching hot surfaces can burn skin. The engine and components will be hot if the engine has been running. Allow the engine to cool before servicing.

IMPORTANT: Avoid damage! Dirt and debris can enter the engine through a damaged filter element:

- **Do not wash paper element.**
- **Do not attempt to clean paper element by tapping against another object.**
- **Do not use pressurized air to clean element.**
- **Replace element only if it is very dirty, damaged or the seal is cracked.**

Check and clean air filter elements at the intervals recommended in the Service Intervals section. See the engine manufacturer's owner's manual provided with your machine for the complete procedure.

Checking Spark Plugs

CAUTION: Avoid injury! Touching hot surfaces can burn skin. The engine and components will be hot if the engine has been running. Allow the engine to cool before servicing.

Check spark plugs at the intervals recommended in the Service Intervals section. See the engine manufacturer's owner's manual provided with your machine for the complete procedure.

Adjusting Carburetor

NOTE: Carburetor is calibrated by the engine manufacturer and is not adjustable.

If engine is operated at altitudes above 1829 m (6,000 ft), some carburetors may require a special high altitude main jet.

If engine is hard to start or runs rough, see the troubleshooting section of the engine manufacturer's owner's manual provided with your machine.

Possible engine surging will occur at high throttle with transmission in "N" neutral and mower PTO switch disengaged. This is a normal condition due to the emission control system.

After performing the checks in the troubleshooting section and your engine is still not performing correctly, contact your dealer.

Replacing Fuel Filter

CAUTION: Avoid injury! Fuel vapors are explosive and flammable:

- **Do not smoke while handling fuel.**
- **Keep fuel away from flames or sparks.**
- **Shut off engine before servicing.**
- **Cool engine before servicing.**
- **Work in a well-ventilated area.**
- **Clean up spilled fuel immediately.**

1.Park machine safely. (See Parking Safely in the Safety section.)

2.Turn fuel shutoff valve to off position.

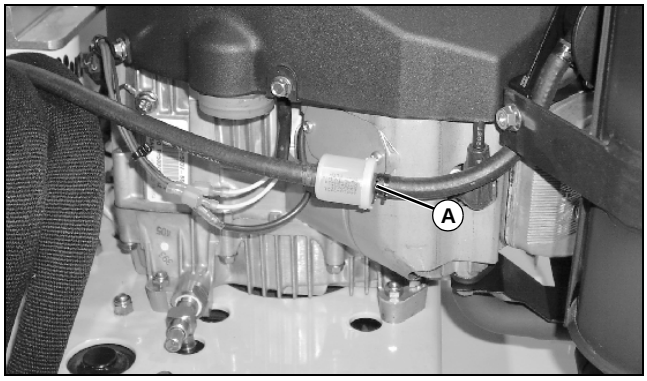

3.Disconnect the fuel hose from the outlet side (A) of the fuel filter, and drain gasoline into a properly marked container.

4.Remove the fuel filter from the inlet fuel hose. Discard filter in appropriate manner.

IMPORTANT: Avoid damage! When installing a new fuel filter, the filter arrow must be pointing in the direction of fuel flow.

5.Connect a new fuel filter to hoses.

6.Install hose clamps.

7.Turn fuel shutoff valve to on position.

Service Transmission

Avoid Fumes

CAUTION: Avoid injury! Engine exhaust fumes contain carbon monoxide and can cause serious illness or death.

Move the machine to an outside area before running the engine.

Do not run an engine in an enclosed area without adequate ventilation.

- **Connect a pipe extension to the engine exhaust pipe to direct the exhaust fumes out of the area.**
- **Allow fresh outside air into the work area to clear the exhaust fumes out.**

Hydraulic Oil

Use only 5W-50 or 15W-50 all synthetic oil.

Checking Transmission Oil Level

1.Park machine safely. (See Parking Safely in the Safety section.)

2.Remove hydraulic reservoir cap; the oil level should be 127 mm (5 in.) from the top of the filler pipe. Add oil as needed.

Changing Transmission Oil and Filter

1.Park machine safely. (See Parking Safely in the Safety section.)

2.Raise and secure the rear of the mower.

3.Allow engine and hydraulic reservoir to cool.

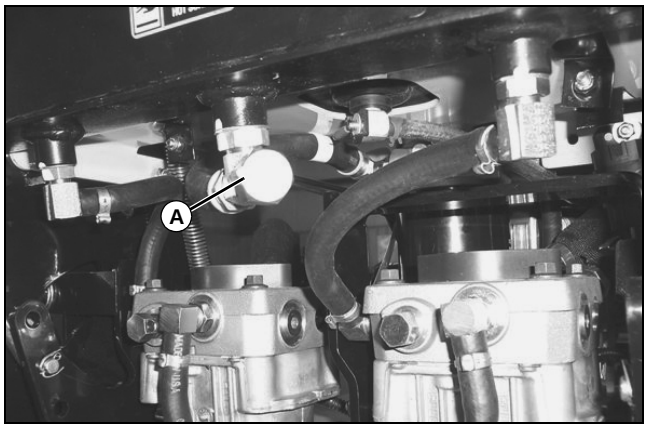

4.Clean area around reservoir filler cap, reservoir drain cap (A), and oil filter mounting base.

NOTE: Drain the reservoir oil into a properly marked container with a capacity of at least 4.7 L (5 qt).

5.Remove the reservoir filler cap and reservoir drain cap. Drain the reservoir oil into a properly marked container with a capacity of at least 4.7 L (5 qt).

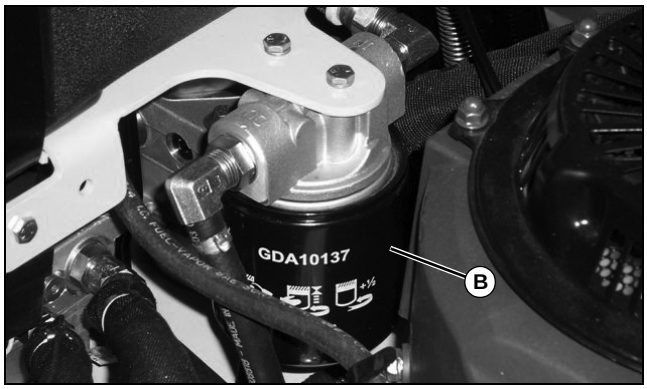

6.Turn hydraulic filter (B) counterclockwise to remove and drain remaining oil.

7.Apply a film of clean oil to gasket of new filter.

8.Install filter. Turn filter clockwise until gasket makes contact with the mounting surface. Tighten 1/2 to 3/4 turn after contact.

9.Install reservoir drain cap and tighten to 41 N•m (30 lb-ft).

NOTE: Total system capacity is approximately 4.7 L (5 qt) however some oil will remain in the wheel motors and lines. Approximately 3.3 L (3.5 qt) is required to refill to a safe operating level.

10.Fill reservoir with approximately 3.3 L (3.5 qt) of oil.

11.Install filler cap on reservoir.

12.Start engine and run at 3/4 throttle position. Unlock the park brake and cycle the control levers forward and rearward several times. Check for leaks.

13.Stop engine. Check reservoir oil fluid level. Add oil as necessary.

Adjusting Transmission Neutral Position

1.Park machine safely. (See Parking Safely in the Safety section.)

CAUTION: Avoid injury! Machine must be safely supported on jackstands before removing or installing wheels. Do not use a hoist or floor jack to support the machine.

2.Raise drive wheels off the ground and securely support the machine and block caster wheels.

3.Start and run the engine until it reaches normal operating temperature.

4.Observe wheel movement as control levers are moved back and forth. The wheels should travel in the correct direction as the levers are moved.

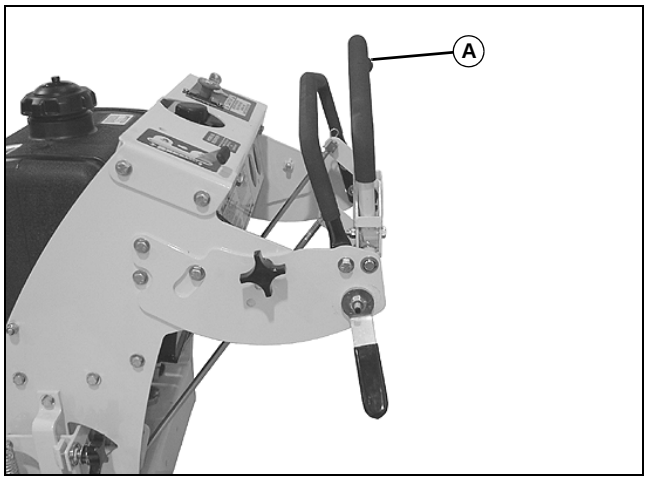

MX18525

5.Move control levers (A) to neutral position; the wheels should stop rotating.

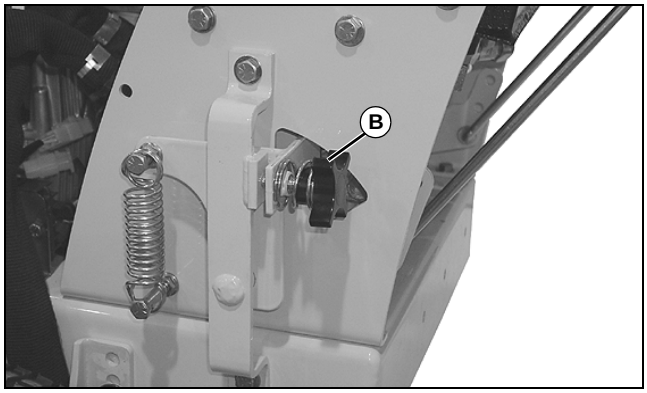

MX18529

- If the wheels continue to rotate, adjust the neutral adjustment knob(s) (B), located on left and right sides of the machine until wheel(s) stop rotating.

6.Shut engine off.

7.Lower the machine to the ground.

Adjusting Transmission Tracking

CAUTION: Avoid injury! Clear area of all bystanders before performing this service procedure.

1.Park machine safely. (See Parking Safely in the Safety section.)

2.Start and run engine until it reaches normal operating temperature.

3.Move machine to an open area for operation.

4.Mark position of safety bar on side of bracket.

CAUTION: Avoid injury! Do not operate machine at a high speed when checking for tracking. Adjust safety bar to limit forward speed.

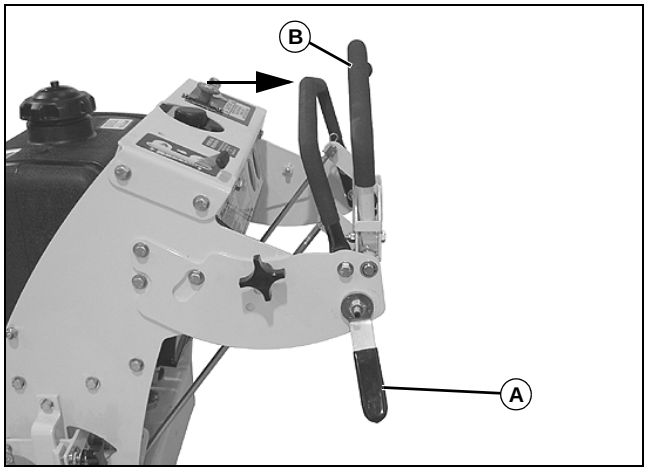

MX18525

5.Loosen lever (A). Move safety bar (B) back away from the control panel and tighten lever (A).

6.Drive machine forward, pushing both control levers all the way to safety bar.

7.Check machine tracking.

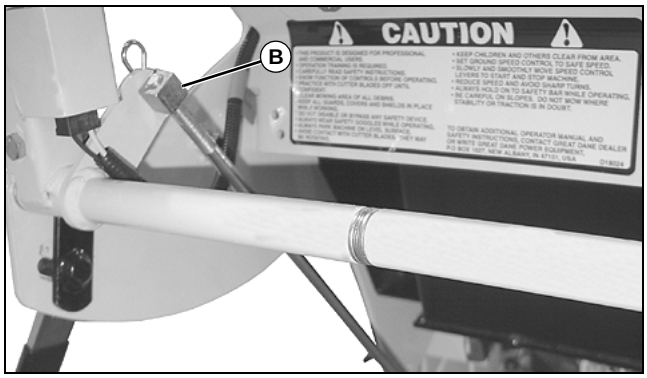

MX18521

- If machine does not drive in straight line, adjust control rod swivel (B) located on both sides of the machine to compensate.

8.Adjust safety bar back to original operating position.

Removing and Installing Traction Drive Belt

1.Park machine safely. (See Parking Safely in the Safety section.)

2.Remove mower deck belt guard.

3.Remove mower deck drive belt.

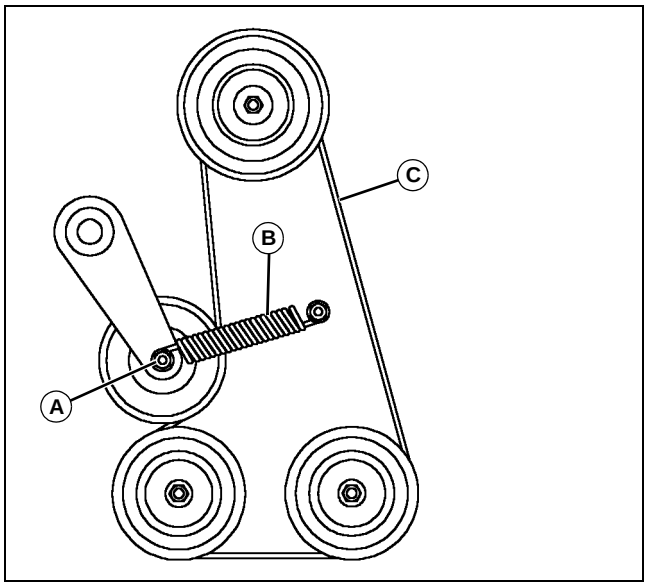

MX18614

4.Disconnect tension spring (B) by removing nut (A) from bell crank.

5.Remove traction drive belt (C).

6.Install new traction drive belt (C).

7.Connect tension spring (B) to bell crank. Install nut (A) and tighten until 1-2 threads of bolt are visible. Do not tighten nut against spring eye.

8.Install mower deck drive belt.

9.Install mower deck belt guard.

Service Mower

Adjusting Deck Belt Tension

1.Park machine safely. (See Parking Safely in the Safety section.)

2.Remove belt cover.

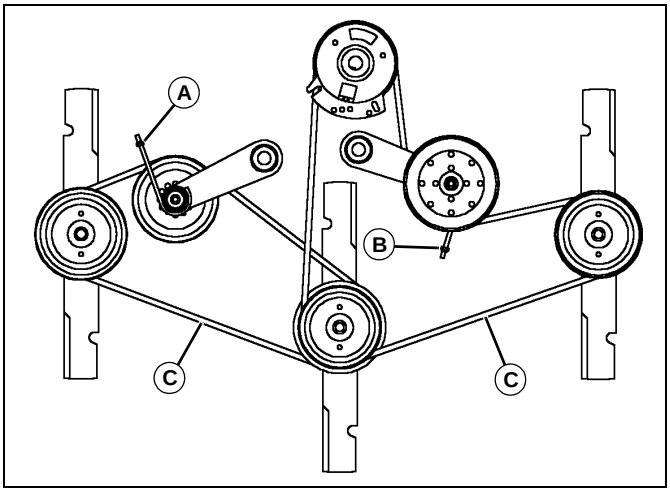

MX18574

Picture Note: 48 in. deck shown.

3.Adjust to proper tension. The belt should deflect a maximum of 13mm (0.5 in.) when a force of 4.5kg (10 lb) is applied to the center of the longest span (C).

4.**To Increase Belt Tension:** Turn nut (A - main mower deck drive belt or B - spindle drive belt) clockwise.

To Decrease Belt Tension: Turn nut (A - main mower deck drive belt or B - spindle drive belt) counterclockwise.

Removing and Installing Mower Deck Drive Belts

1.Park machine safely. (See Parking Safely in the Safety section.)

2.Remove mower deck belt cover.

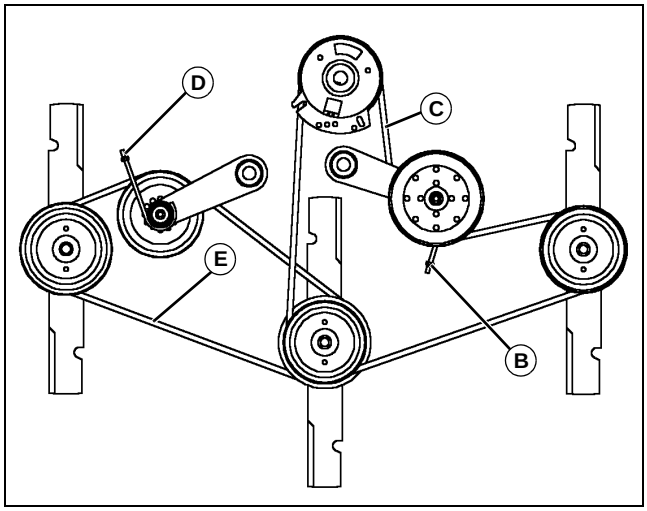

MX18574

Picture Note: 48 in. deck shown.

3.Release mower deck drive belt tension by turning the tension adjuster nut (B) counterclockwise.

4.Remove mower deck drive belt (C).

5.Release spindle drive belt tension by turning the tensioner adjuster nut (D) counterclockwise.

6.Remove spindle drive belt (E).

7.Install the new spindle drive belt (E) and adjust the drive belt tension.

8.Install new mower deck drive belt (C) and adjust the drive belt tension.

9.Install mower deck drive belt covers.

NOTE: Check and adjust mower deck drive belts after 1 hour and 6 hours.

Checking for Bent Mower Blades

CAUTION: Avoid injury! Mower blades are sharp. Always wear gloves when handling mower blades or working near blades.

Only replace blades. Never straighten or weld them.

1.Park machine safely. (See Parking Safely in the SAFETY section.)

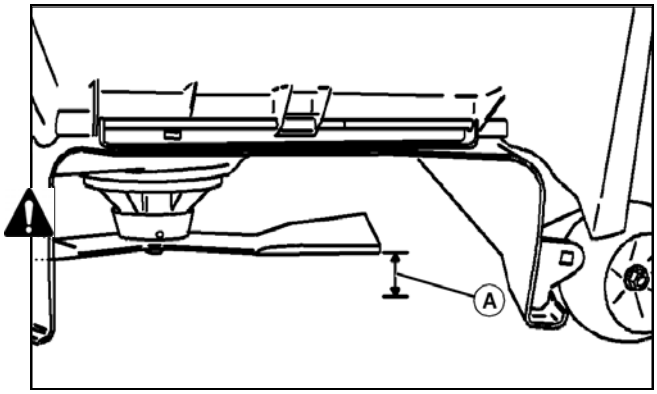

MX4897

Picture Note: Mower deck with side discharge used for illustration

2.Measure distance (A) between blade tip and flat ground surface.

3.Rotate blade 180° and measure distance between other blade tip and flat ground surface.

4.Install new blade if the difference between the two measurements is more than 3 mm (1/8 in.).

5.Repeat for all blades.

Replacing Mower Blades

CAUTION: Avoid injury! Mower blades are sharp. Always wear gloves when handling mower blades or working near blades.

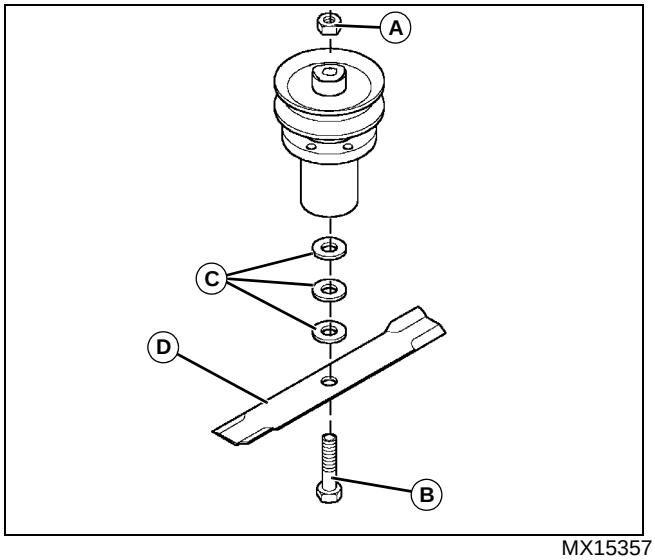

MX15357

1.Use two long-handled 15/16 in. wrenches to loosen nut (A).

2.Remove nut (A), blade bolt (B), three 1/4 in. washers (C) and blade (D).

3.Install replacement blade:

- Blade wing must face toward top of mower deck.

IMPORTANT: Avoid damage! When installing the blade:
• Make sure the blade is properly seated on the blade bolt.
• Make sure the three spacers (C) are in place on top of blade.

- Install blade bolt (B), blade (D), three 1/4 in. washers (C) and nut (A).
- Tighten blade nut to 81 N•m (60 lb-ft).

4.Lower machine.

5.Adjust mower deck to a desirable cutting height.

Sharpening Blades

CAUTION: Avoid injury! Mower blades are dangerous!
•Always wear gloves while working on blades.
•Always wear safety eye protection when grinding.

- Sharpen blades with grinder, hand file, or electric blade sharpener.

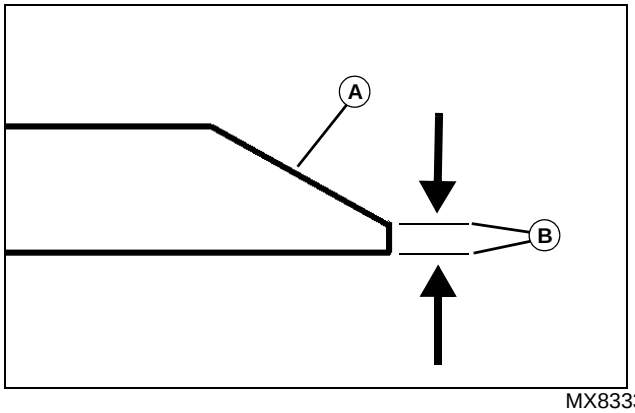

MX8333

- Keep original bevel (A) when grinding.
- Blade should have 0.40 mm (1/64 in.) cutting edge (B) or less.
- Balance blades before installing.

Balancing Blades

CAUTION: Avoid injury! Mower blades are sharp. Always wear gloves when handling mower blades or working near blades

1.Clean blade.

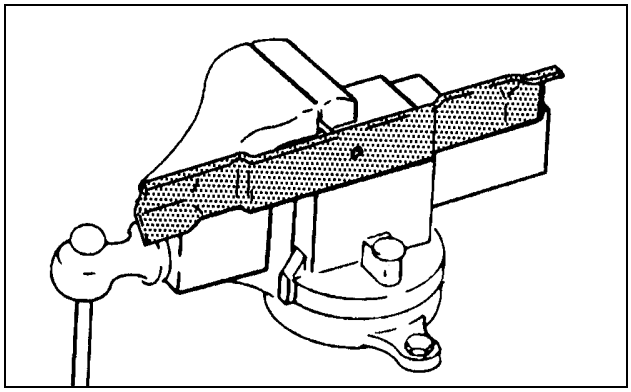

M61524

2.Put blade on nail in a vise. Turn blade to horizontal position.

3.Check balance. If blade is not balanced, heavy end of blade will drop.

4.Grind bevel of heavy end. Do not change blade bevel.

Replacing Mower Spindle Bearings

1.Park machine safely. (See Parking Safely in the Safety section.)

2.Remove mower blade.

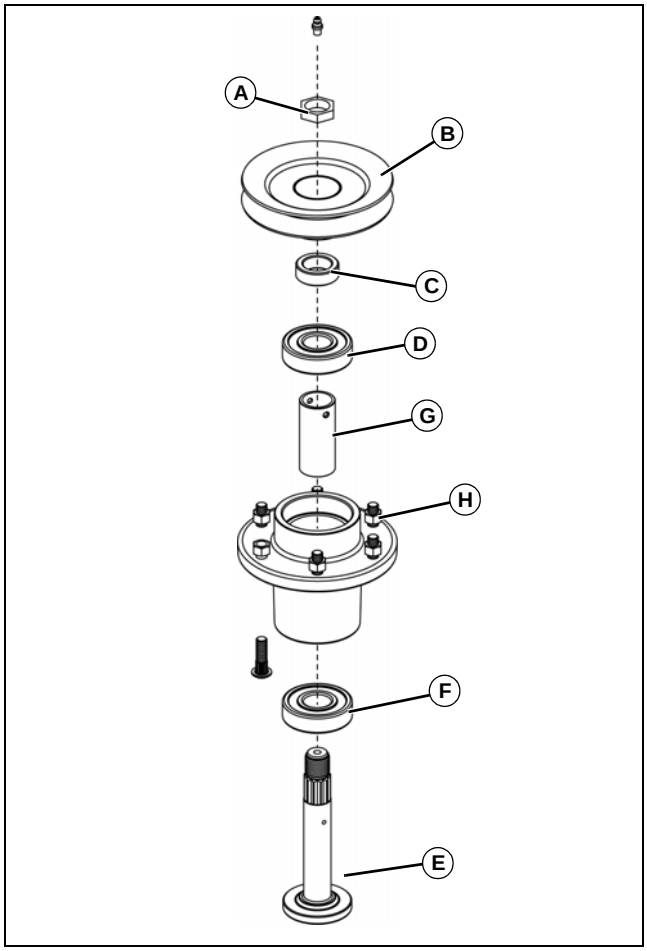

MX15354

3.Remove nut (A), pulley (B) and spacer (C).

4.Remove spindle shaft (E), lower bearing (F) and spacer (G) from spindle housing (H). Discard bearing.

5.Remove and discard upper bearing (D).

6.Clean entire assembly.

7.Install a new lower bearing (F) and spacer (G) on the spindle shaft (E).

IMPORTANT: Avoid damage! The clearance between the lower bearing and the housing is only 0.05 mm (0.002 in.). Do not force bearing into housing.

8.Install the spindle shaft (E), lower bearing (F) and spacer (G) into the spindle housing (H).

9.Install the upper bearing (D).

10.Install spacer (C).

11.Install pulley (B) and nut (A). Tighten nut to 61 N•m (50 lb-ft).

12.Install mower blade, blade washers and blade bolt assembly. Tighten bolt to 163 N•m (120 lb-ft). (See Checking and Replacing Mower Blades.)

Replacing Mower Spindle Bearings - 48-Inch Mower Deck

1.Park machine safely. (See Parking Safely in the Safety section.)

2.Remove engine-to-deck drive and spindle drive belts.

3.Remove mower blade.

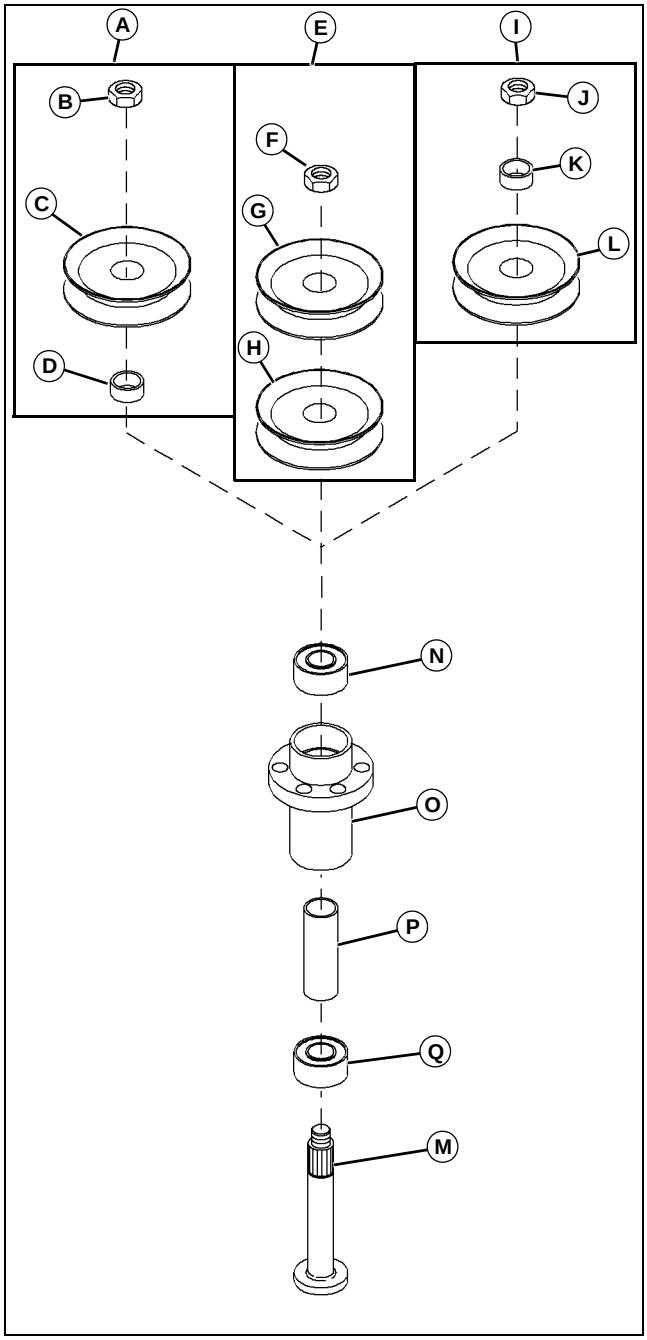

MX18629

4.Remove pulleys:

- **Left Spindle (A):** Remove nut (B), pulley (C) and spacer (D).
- **Center Spindle (E):** Remove nut (F), drive pulley (G) and spindle pulley (H).
- **Right Spindle (I):** Remove nut (J), spacer (K) and pulley (L).

5.Remove spindle shaft (M), lower bearing (Q) and spacer (P) from spindle housing (O). Discard bearing.

6.Remove and discard upper bearing (N).

7.Clean entire assembly.

8.Install a new lower bearing (Q) and spacer (P) on the spindle shaft (M).

IMPORTANT: Avoid damage! The clearance between the lower bearing and the housing is only 0.05 mm (0.002 in.). Do not force bearing into housing.

9.Install the spindle shaft (M), lower bearing (Q) and spacer (P) into the spindle housing (O).

10.Install the upper bearing (N).

11.Install upper pulleys:

- **Left Spindle (A):** Install spacer (D), pulley (C) and nut (B). Tighten nut to 68 N•m (50 lb-ft).
- **Center Spindle (E):** Install spindle pulley (H), drive pulley (G) and nut (F). Tighten nut to 68 N•m (50 lb-ft).
- **Right Spindle (I):** Install pulley (L), spacer (K) and nut (J). Tighten nut to 68 N•m (50 lb-ft).

12.Install mower blade, blade washers and blade bolt assembly. Tighten nut to 163 N•m (120 lb-ft).

Replacing Mower Deck Idler Pulleys

1.Park machine safely. (See Parking Safely in the Safety section.)

2.Remove the mower deck drive and spindle drive belts.

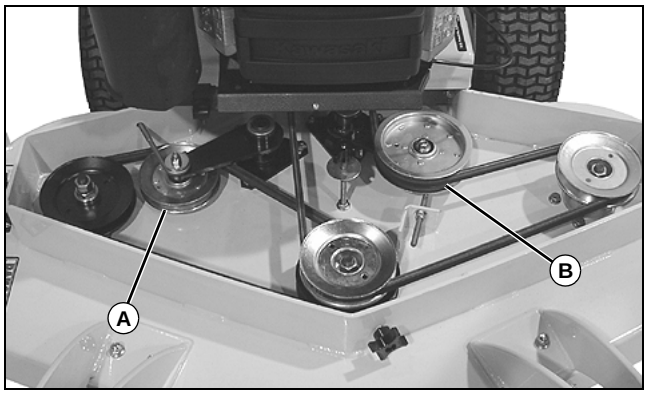

MX18520

3.Remove the mower deck drive tension idler pulley (A) and the mower and spindle drive tension idler pulley (B).

4.Install new idler pulleys.

5.Install spindle drive and mower deck drive belts.

6.Adjust belt tension.

Service Electrical

Replacing Fuses

IMPORTANT: Avoid damage! When replacing fuses - use only 20-amp fuses or you may damage the circuit.

The machine is equipped with one 20-amp fuse to protect the charging circuit. These fuses are located under the control panel area.

1.Remove defective fuse from socket.

2.Check metal clip in fuse window and discard fuse if clip is broken.

3.Install new fuse into socket.

Service Miscellaneous

Filling Fuel Tank

CAUTION: Avoid injury! Fuel vapors are explosive and flammable:

- **Shut engine off before filling fuel tank.**
- **Do not smoke while handling fuel.**
- **Keep fuel away from flames or sparks.**
- **Fill fuel tank outdoors or in well ventilated area.**
- **Clean up spilled fuel immediately.**
- **Use clean approved non-metal container to prevent static electric discharge.**
- **Use clean approved plastic funnel without screen or filter to prevent static electric discharge.**

IMPORTANT: Avoid damage! Dirt and water in fuel can cause engine damage:

- **Clean dirt and debris from the fuel tank opening.**
- **Use clean, fresh, stabilized fuel.**
- **Fill the fuel tank at the end of each day's operation to keep condensation out of the fuel tank.**
- **Use a non-metallic funnel with a plastic mesh strainer when filling the fuel tank or container.**

Fill fuel tank at the end of each day's operation to prevent condensation and freezing during cold weather.

1.Park machine safely. (See Parking Safely in the SAFETY section.)

2.Allow engine to cool.

3.Remove any trash from area around fuel tank cap.

4.Remove fuel tank cap slowly to allow any pressure built up in tank to escape.

5.Fill fuel tank only to bottom of filler neck.

6.Install fuel tank cap.

Servicing Caster Wheel Roller Bearings

1.Park machine safely. (See Parking Safely in the Safety section.)

2.Raise and securely support the front of the mower deck.

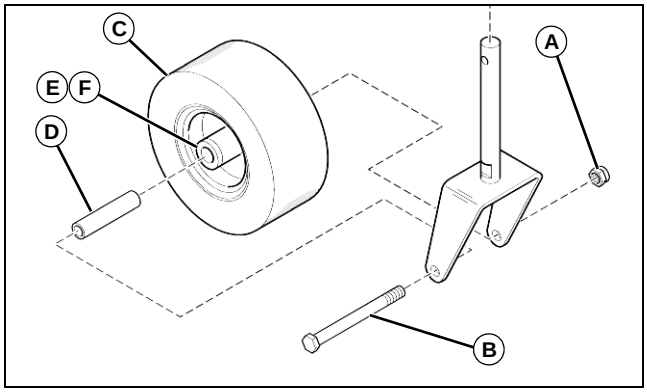

MX15717

3.Remove nut (A), bolt (B) and wheel assembly (C).

4.Remove bearing sleeve (D), bearing retainer (E), roller bearing (F) from wheel.

5.Clean bushing and roller bearing; and pack with clean grease.

6.Install wheel assembly (C), roller bearing (F), bearing retainer (E), bearing sleeve (D), bolt (B) and nut (A).

Replacing Caster Pivot Bearing Bushings

1.Park machine safely. (See Parking Safely in the Safety section.)

2.Raise and securely support the front of the mower deck.

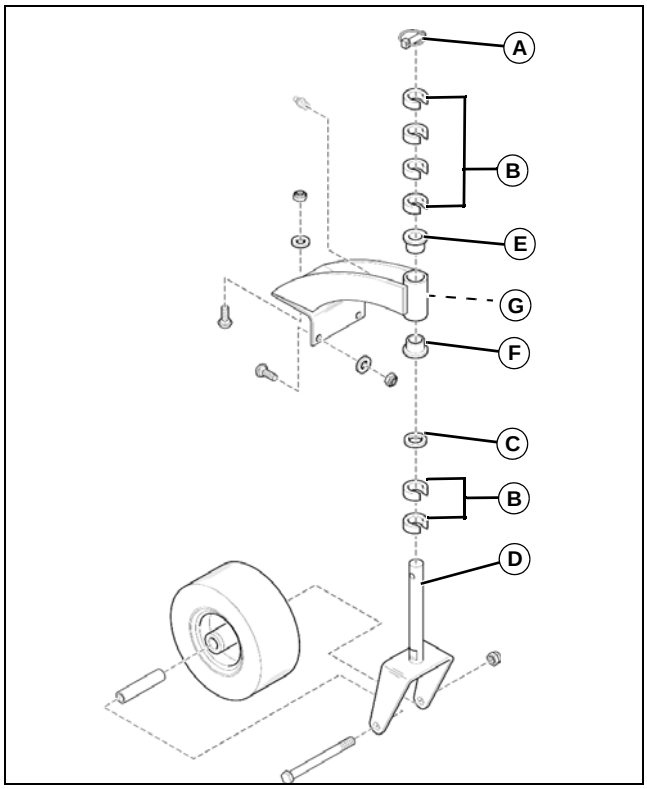

MX15717

3.Remove lynch pin (A), spacer bushings (B), washer (C) and caster yoke and wheel assembly (D).

4.Remove and discard upper (E) and lower (F) bushings.

5.Install new bushings (E and F).

IMPORTANT: Avoid damage! Do not allow washer (C) to set on caster yoke (D). It must be on top of height-of-cut spacer bushings (B).

6.Install caster yoke and wheel assembly (D), washer (C), spacer bushings (B) and lynch pin (A).

7.Apply grease to lubrication fitting (G).

Checking Wheel Nuts

Tighten rear wheel nuts in an alternating pattern to 75 N•m (55 lb-ft).

Troubleshooting

Using Troubleshooting Chart

If you are experiencing a problem that is not listed in this chart, see your Great Dane servicing dealer for service.

When you have checked all the possible causes listed and you are still experiencing the problem, see your Great Dane servicing dealer.

Engine

If	Check
Engine Will Not Start or Is Hard to Start	Motion control levers not in the neutral detent position. Key switch not in proper position. PTO engaged. Stale or improper fuel/fuel level. Plugged fuel filter. Fuel shutoff valve in off position. Plugged air intake filter. Spark plug wire is loose or disconnected. Spark plug not gapped correctly. Blown 20-amp fuse (main power circuit). Electrical problem - dead battery. Choke adjusted incorrectly. See your Great Dane servicing dealer.
Engine Will Not Slow Idle	Bent or kinked throttle cable. Bent governor control. Incorrect governor idle control. Carburetion problems. See your Great Dane servicing dealer.
Engine Runs Rough or Stalls	Plugged fuel filter. Plugged air intake system. Fuel cap vent dirty. Stale or improper fuel/fuel level. Spark plug not gapped correctly. Replace spark plug. Choke adjusted incorrectly. See your Great Dane servicing dealer.
Engine Knocks	Engine oil level low. Reduce load. (Slower ground speed.) Fuel is bad. Fill tank with fresh fuel, correct octane. Idle speed too slow.
Engine Overheats	Clean cooling fins. Low oil level. Do not operate at slow idle. Operate at full-throttle setting. Cooling air intake screen is dirty. Plugged air intake filter. Operating at too fast ground speed for conditions.
Engine Lacks Power	Plugged air intake system. Plugged fuel filter. Improper type of fuel. Drain tank and fill with correct fuel. Clean cooling fins to help prevent overheating. Replace spark plug.
Engine Uses Too Much Oil	Find and correct oil leaks. Incorrect engine oil. Plugged oil filter. Plugged air intake filter.
Engine Backfires Through Muffler	Throttle should be at low idle for several seconds before turning off machine. Leaking/damaged exhaust manifold gasket.
High Fuel Consumption	Improper type of fuel. Plugged air intake system. Operating at too fast ground speed for conditions. Improper valve clearance. See your Great Dane servicing dealer. Restricted air intake system.

Electrical System

If	Check
PTO Clutch Does Not Engage	Blown 20-amp fuse (main power circuit). Faulty PTO switch. Faulty PTO clutch. Loose PTO clutch connections.

Machine

If	Check
Excessive Machine Vibration	Engine speed too slow. Deck drive belts worn or damaged. Pump drive belt worn or damaged. Dirt or debris on drive sheaves. Loose or damaged electric PTO or drive sheave. Bent or damaged cutting blades.
Machine Will Not Move With Engine Running	Park brake locked. Hydraulic oil level low. Hydraulic oil cold - allow engine to warm. Pump drive belt slipping. Pump free-wheel valves open. Pump drive belt damaged or worn. Wheel motor problems. See your Great Dane servicing dealer.
Machine Creeps With Engine Running and Motion Control Levers in a Neutral Position	Needs control linkage adjustment.

Park Brake

If	Check
Park Brake Not Working Correctly	Brake components damaged.

Steering

If	Check
Steering Not Working	Park brake locked. Pump free-wheel valves partially open. Improper tire inflation. Hydrostatic transmission oil low. Traction drive belt slipping. Traction drive belt damaged or worn.
Machine Will Not Follow a Straight Path	Steering linkage out of adjustment.
Machine Moves to the Left or Right With Engine Running and Transmission in Neutral	Pump linkage (neutral position) out of adjustment.

Mower Deck

If	Check
Discharge Chute Plugged	Grass is wet - mow grass only when dry. Raise cutting height. Mow at full throttle. Ground speed too fast for conditions. Correct installation of deck drive belt.
Mower Deck Vibrates	Run engine at full throttle. Loose hardware. Check/replace mower deck drive belt. Check/replace spindle drive belt. Blades bolts are loose. Blades are bent or worn. Sharpen and balance blades. Remove belt shields and check for debris on sheaves. Check sheaves for proper alignment or damage. See your Great Dane servicing dealer.
Mower Blades Do Not Engage	Mower deck drive belt slipping or broken. Spindle drive belt slipping or broken. Mower deck belt tension spring not installed or broken. PTO switch failure. 20-amp fuse is blown (main power circuit). Loose electrical connections. Faulty PTO clutch.
Mower Cuts Unevenly	Mower deck not properly leveled. Ground speed too fast for conditions. Run engine at full throttle. Reduce ground speed when making turns. Blades are bent or worn. Sharpen or replace blades. Change mowing pattern. Check tire pressure.

Storage

Storing Safety

CAUTION: Avoid injury! Fuel vapors are explosive and flammable. Engine exhaust fumes contain carbon monoxide and can cause serious illness or death:

- **Run the engine only long enough to move the machine to or from storage.**
- **Do not store vehicle with fuel in the tank inside a building where fumes may reach an open flame or spark.**
- **Allow the engine to cool before storing the machine in any enclosure.**

Preparing Machine for Storage

1.Repair any worn or damaged parts. Replace parts if necessary. Tighten loose hardware.

2.Repair scratched or chipped metal surfaces to prevent rust.

3.Clean under the deck and remove grass and debris from inside chute.

4.Wash the machine and apply wax to metal surfaces.

5.Run machine for five minutes to dry belts and pulleys.

6.Apply light coat of engine oil to pivot and wear points to prevent rust.

Preparing Fuel and Engine for Storage

Fuel:

If you have been using “Stabilized Fuel”, add stabilized fuel to tank until the tank is full.

NOTE: Filling the fuel tank reduces the amount of air in the fuel tank and helps reduce deterioration of fuel.

If you are not using “Stabilized Fuel”:

1.Park machine safely in a well-ventilated area.

NOTE: Try to anticipate the last time the machine will be used for the season so very little fuel is left in the fuel tank.

2.Turn on engine and allow to run until it runs out of fuel.

3.Turn key to off position.

4.Mix fresh fuel and fuel stabilizer in separate container. Follow stabilizer instructions for mixing.

5.Fill fuel tank with stabilized fuel.

6.Run engine for a few minutes to allow fuel mixture to circulate through fuel system.

Engine:

Engine storage procedure should be used when vehicle is not to be used for longer than 60 days.

1.Change engine oil and filter while engine is warm.

2.Service air filter if necessary.

3.Clean debris from engine air intake screen.

4.Remove spark plugs. Put 30 mL (1 oz.) of clean engine oil in cylinders.

5.Crank the engine five or six times to allow oil to be distributed.

6.Install spark plugs.

7.Clean the engine and engine compartment.

8.Store the machine in a dry, protected place. If machine is stored outside, put a waterproof cover over it.

Removing Machine From Storage

1.Check tire pressure.

2.Check engine oil level.

3.Check spark plug gap. Install and tighten plugs to specified torque.

4.Lubricate all grease points.

5.Run the engine 5 minutes without the mower or any attachments running to allow oil to be distributed throughout engine.

6.Be sure all shields and guards or deflectors are in place.

Assembly

Check Engine Oil Level

1.Remove dipstick from tube by unscrewing it. Wipe it clean.

2.Install dipstick and allow the cap to rest on the end of the tube. Do not tighten the cap.

3.Remove dipstick. Check oil level on dipstick; oil level should be between the ADD and FULL marks.

- If oil is low, add oil to bring oil level no higher than the FULL mark on dipstick.
- If oil level is above the FULL mark, drain to proper level.

4.Install and tighten dipstick.

Check Tire Pressure

CAUTION: Avoid injury! Explosive separation of a tire and rim parts can cause serious injury or death:

- **DO NOT attempt to mount a tire without the proper equipment and experience to perform the job.**
- **Always maintain the correct tire pressure. DO NOT inflate the tires above the recommended pressure. Never weld or heat a wheel and tire assembly. The heat can cause an increase in air pressure resulting in a tire explosion. Welding can structurally weaken or deform the wheel.**
- **When inflating tires, use a clip-on chuck and extension hose long enough to allow you to stand to one side and NOT in front of or over the tire assembly.**
- **Check tires for low pressure, cuts, bubbles, damaged rims or missing lug bolts and nuts.**

1.Check tires for damage.

2.Check tire pressure with an accurate gauge.

3.Check that tires have correct pressure. Add air, if necessary:

Tire Size	Pressure
Front: 9 x 3.5-4	172-207kPa (25-30 psi)
Rear: 16 x 6.5-8	69-83kPa (10-12 psi)

Lubricate Machine

Lubricate all moving parts before operating the machine. See Lubrication Points in the Service Lubrication section.

Check Mower Deck Level

The mower deck is assembled and adjusted at the factory. After machine is completely assembled, check the mower front-to-rear and side-to-side deck level.

Check Safety System

For a complete checkout procedure of the safety interlock system, see Testing the Safety Interlock System in the Operating section.

Initial Adjustments

CAUTION: Avoid injury! Clear area of bystanders before performing this service procedure.

1.Raise the rear of the machine until the drive wheels are off the ground. Support the machine with jackstands.

2.Start and run the engine until it reaches normal operating temperature.

3.Move control levers to the forward position and observe drive wheel rotation; the drive wheels should rotate in the correct direction.

4.Move the control levers to the reverse position and observe drive wheel rotation; the drive wheels should rotate in the correct direction.

NOTE: Neutral position and transmission linkage adjustments will needed to be rechecked after several hours of operation.

5.Release control levers; the levers should return to the neutral position and wheel rotation should stop. If the wheels do not stop, adjust the neutral adjustment knob for each wheel motor.

6.Move PTO/clutch switch to on position; mower clutch should engage. Run blades for several minutes.

7.Move PTO/clutch switch to off position and shut the engine off.

8.Check all belts for proper tension.

9.Start the engine and test drive the machine in an open area. Drive the machine forward if the machine drifts to the right or left, adjust the transmission control linkage.

Specifications

Engine

NOTE: see engine manufacturer's owner's manual provided with your machine for engine specifications.

Tires

Front . . . . . 9 x 3.50-4
Rear. . . . . 16 x 6.50-8
Inflation Front . . . . . 172—207 kPa (25—30 psi)
Inflation Rear . . . . . 69—83 kPa (10—12 psi)
Wheel Nut Torque . . . . . 75 N•m (55 lb-ft)

Travel Speeds

Forward . . . . . 0—13.2 km/h (0—7 mph)
Reverse . . . . . 0—5 km/h (0—3 mph)

Capacities

Fuel Tank. . . . . 18.9 L (5 gal)
Hydraulic System Total
(Completely Dry System) . . . . . 4.7 L (5 qt)
Hydraulic Reservoir with Filter Change . . . . . 3.3 L (3.5 qt)

Dimensions

Wheel Base . . . . . 92 cm (36 in.)
Overall Height . . . . . 1.09 m (43 in.)
Overall Length . . . . . 1.87 m (74 in.)
Overall Width Rear Wheels . . . . . 92 cm (36 in.)

Machine With 36-inch Mower Deck

Cutting Blades 2
Weight . . . . . 254 kg (560 lb)
Blade Bolt Torque . . . . . 81 N•m (60 lb-ft)
Cutting Width . . . . . 90 cm (35.5 in.)
Cutting Height . . . . . 38—127 mm (1.5—5.0 in.)

Machine With 48-inch Mower Deck

Cutting Blades 3
Weight . . . . . 263 kg (580 lb)
Blade Bolt Torque . . . . . 81 N•m (60 lb-ft)
Cutting Width . . . . . 1.21 m (47.5 in.)
Cutting Height . . . . . 38—127 mm (1.5—5.0 in.)

(Specifications and design subject to change without notice.)

Replacement Parts

Parts

We recommend Great Dane quality parts available at your Great Dane dealer.

Part numbers may change, use part numbers listed below when you order. If a number changes, your dealer will have the latest number.

When you order parts, your Great Dane dealer needs your machine serial number and engine serial number. These are the numbers that you recorded in the Product Identification section of this manual.

Part Numbers

Item	Part Number
Fuel Tank Cap	D18097
Traction (Hydro) Drive Belt	D38006
Hydraulic Oil Filter	GDA10137
Engine to Blade Belts: • 92cm (36 in.) Deck • 1.22m (48 in.) Deck	 D38007 D18087
Mower Deck Drive Belts: • 1.22m (48 in.)	 D38019
Mower Blades: • 48-Inch Mower Deck: 42cm (16.5 in.) Blade • 36-Inch Mower Decks: 45cm (18 in.) Blade	 GDU10230 or D18086 GDU10231 or D18037

(Part numbers are subject to change without notice. Part numbers may be different outside the U.S.A.)

Service Electrical

Wiring Schematics

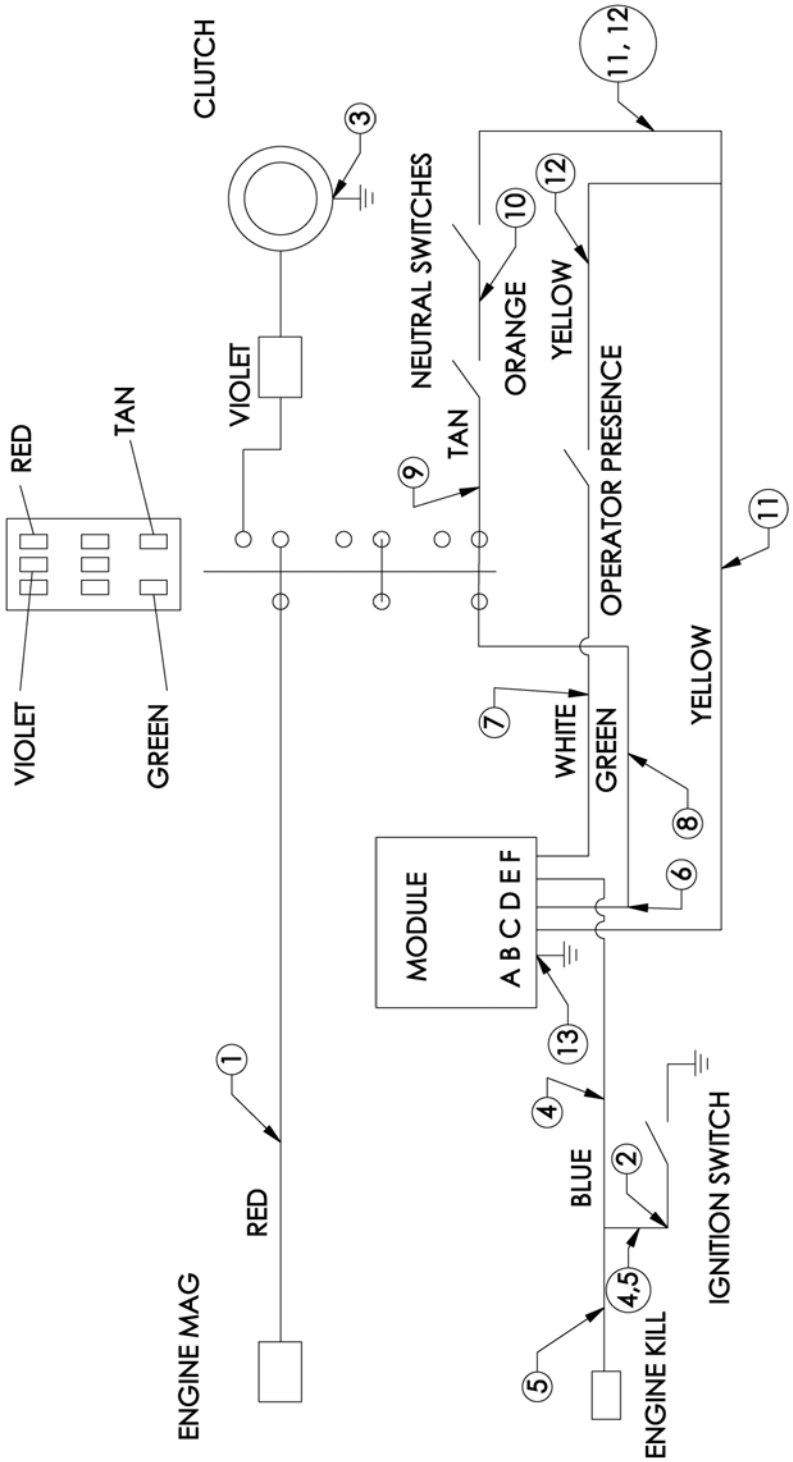
CLUTCH
3
VIOLET
RED
TAN
VIOLET
GREEN
NEUTRAL SWITCHES
9
TAN
10
ORANGE
12
YELLOW
11, 12
OPERATOR PRESENCE
11
YELLOW
7
WHITE
GREEN
8
6
MODULE
A B C D E F
13
1
RED
ENGINE MAG
4
BLUE
2
IGNITION SWITCH
4,5
5
ENGINE KILL

Service Record GD

Record Service Dates

Engine Oil and Filter Change	Lubricate Machine	Air Cleaner Element Clean/Replace

FRAME ASSEMBLY

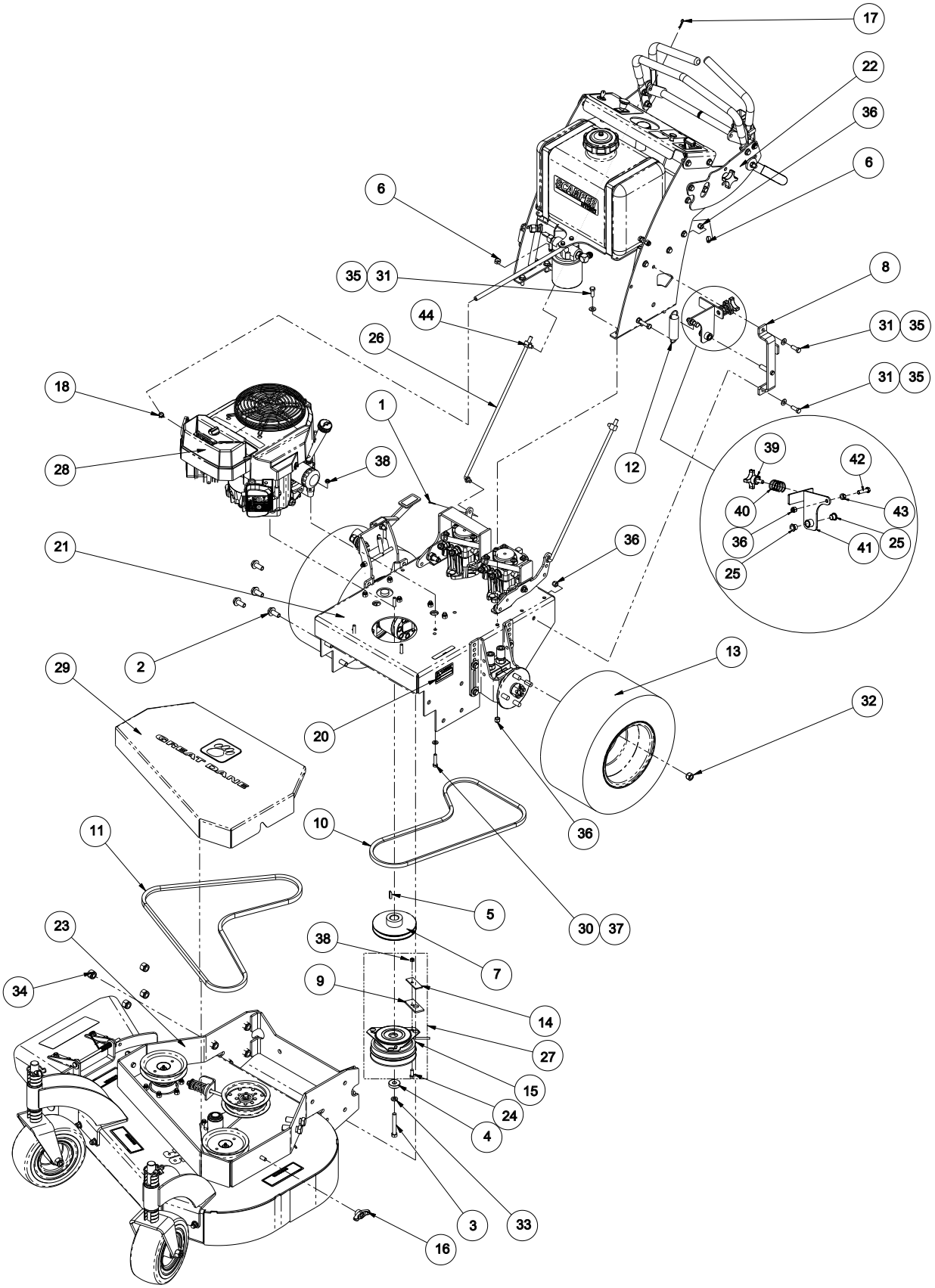

FRAME ASSEMBLY

ITEM	PART NO	QTY	DESCRIPTION
1	D14107	2	PIN, COT .094 X .750 EXTP Y
2	D14110	8	BOLT, 1/2-13 X 1.25 HEX 5 Y
3	D14252	1	BOLT, 7/16-20 X 3 KAW. ENG.
4	D18056	1	SPACER
5	D18145	1	SHAFT KEY
6	D18379	3	CLAMP, HOSE
7	D18085	1	PULLEY
8	D35027	1	WLDT, LH 36" SC STOP
N/I	D35028	1	WLDT, RH 36" SC STOP
9	D18068	1	BUMPER, RUBBER .188 X 3.12 X 1.25
10	D38006	1	BELT
11	D38007	1	BELT
12	D38024	2	SPRING, PUMP REVERSE
13	D38038	2	TIRE & RIM ASSY,16X65X8
14	D12043	1	PLATE, CLUTCH BUMBER RETAINER
15	D18000	1	CLUTCH, ELECTRIC BRAKE
16	M119352	2	KNOB, LOCKING
17	130879	2	PIN, HAR .080 X 1.19
18	130924	1	CLAMP, HOSE - 1/2" SPRING
19	200411	1	HARNESS, WIRE - SCAMPER
20	N/A	1	PLATE, SERIAL
21	N/A	1	ASSY, SCAMPER ENGINE BED
22	N/A	1	ASSY, SCAMPER REAR END
23	N/A	1	ASSY, 36" SCAMPER DECK
24	967152	1	BOLT, 5/16-18 X .750 CRG
25	D18013	4	BEARING, FLG .500 X .625 X .500 BRNZ
26	D38025	2	CONTROL ROD
27	200431	1	ASSY, CLUTCH INCLUDES 9, 14, 15, 24, 38
28	N/A	1	ASSY, 15HP KAW ENGINE
29	200433	1	ASSY, 36" SCAMPER BELT SHIELD
	200553	1	ASSY, 48” SCAMPER BELT SHIELD
30	960025	4	BOLT, 5/16-18 X 1.50 HEX 5 Y
31	960046	10	BOLT, 3/8-16 X 1.00 HEX 5 Y
32	960526	8	NUT, 1/2-20 LUG C
33	960603	1	WASHER, .438 MED SPRG LOCK Y
34	964015	8	LOCKNUT, 1/2-13 NYLOC Y
35	964501	10	WASHER, .406 X .813 X .065 FLAT Y
36	968087	12	LOCKNUT, 3/8-16 NYLOC Y
37	967095	4	WASHER, .313 X .688 X .065 FLAT Y
38	967115	5	LOCKNUT, 5/16-18 NYLOC Y
39	D18047	2	KNOB, STAR 3/8-16 X 1.00
40	D18074	2	SPRING, NEUTRAL ADJUST
41	D35029	1	WLDT, LH SC REAR DIRECTION ARM
	D35030	1	WLDT, RH SC REAR DIRECTION ARM
42	960048	2	BOLT, 3/8-16 X 1.50 HEX 5 Y
43	964016	2	LOCKNUT, 3/8-16 WHIZ Y
44	D33002	2	SWIVEL, 3/8-24

ENGINE BED ASSEMBLY

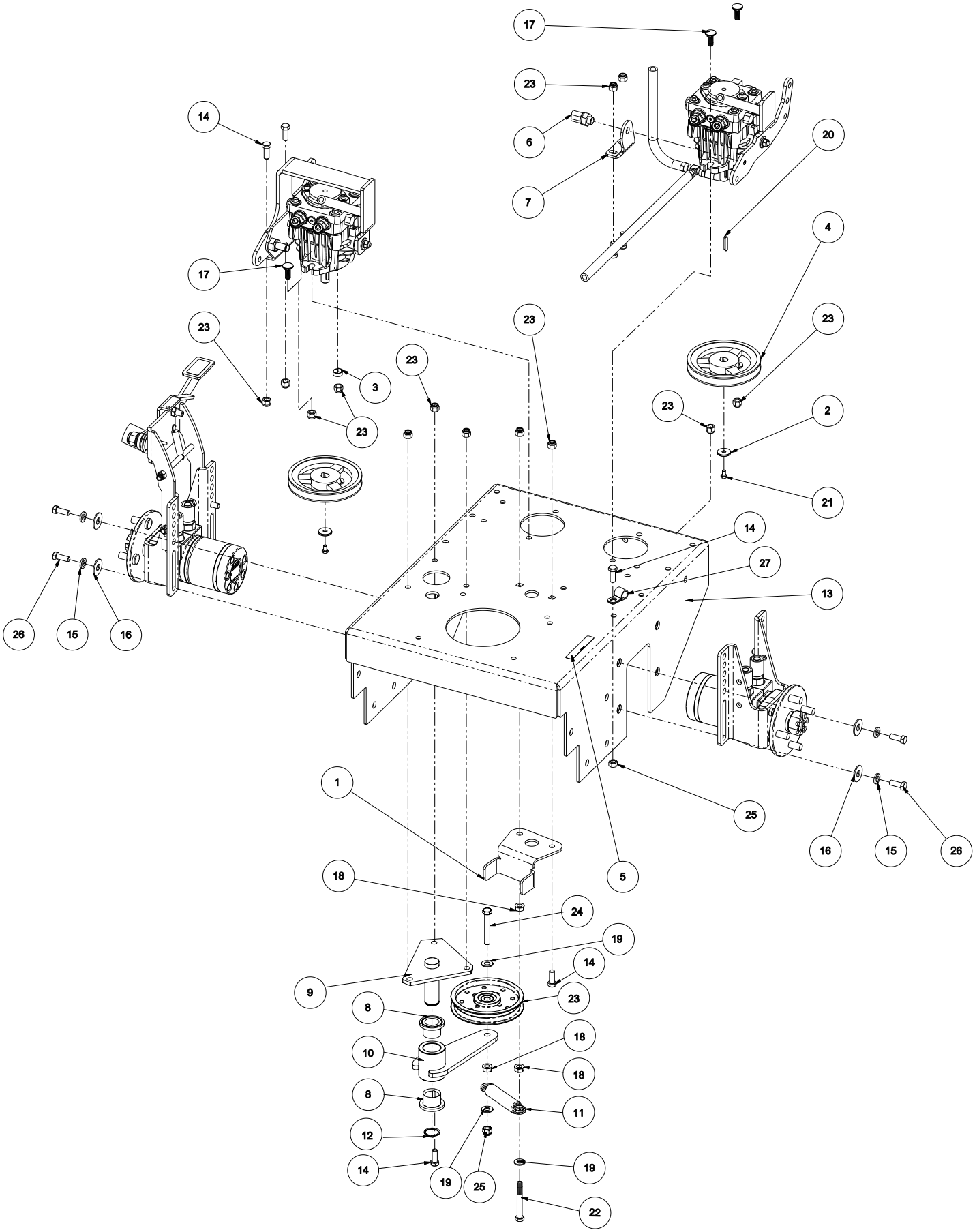

ENGINE BED ASSEMBLY

ITEM	PART NO	QTY	DESCRIPTION
1	D12027	1	BRACKET, CLUTCH
2	D14160	2	WASHER, .250 WIDE HEAVY FLAT Y
3	D18379	1	CLAMP, HOSE
4	TCA15316	2	ASSY, PUMP PULLEY W/SET SCREW
5	TCU17047	1	LABEL, PATENT
6	200412	2	SWITCH, NEUTRAL
7	200417	1	BRACKET, NEUTRAL SWITCH
8	D18076	2	BRG, FLG 1.00 X 1.25 X 1.00
9	GDA10036	1	PIVOT, PUMP IDLER MOUNTING
10	D15032	1	WLDT, IDLER ARM
11	D18071	1	SPRING, EXT .900 X .135 X 4.50
12	424390	1	SNAP RING, 1.00 X 1.25 X 1.00
13	200544	1	WLDT, ENGINE PLATE
14	960046	8	BOLT, 3/8-16 X 1.00 HEX 5 Y
15	960603	8	WASHER, .438 MED SPRG LOCK Y
16	960703	8	WASHER, .438 REG FLAT Y
17	963053	4	BOLT, 3/8-16 X 1.00 CRG 5 Y
18	964016	3	LOCKNUT, 3/8-16 WHIZ Y
19	964501	4	WASHER, .406 X .813 X .065 FLAT Y
20	966058	2	KEY, M5 X M5 X M30 RD
21	967041	2	BOLT, M6X1.00X10 HEX 8.8 Y
22	967112	1	BOLT, 3/8-16 X 3.00 HEX 8 Y
23	GDA10032	1	PULLEY, FLAT 4.50 X .375 W/BRG
24	960052	1	BOLT, 3/8-16 X 2.50 HEX 5
25	968087	1	LOCKNUT, 3/8-16 NYLOC Y
26	960079	8	BOLT, 7/16-14 x 1.00 HEX 5
27	AH89557	1	P-CLIP, .500 INSULATED

PUMP ASSEMBLY

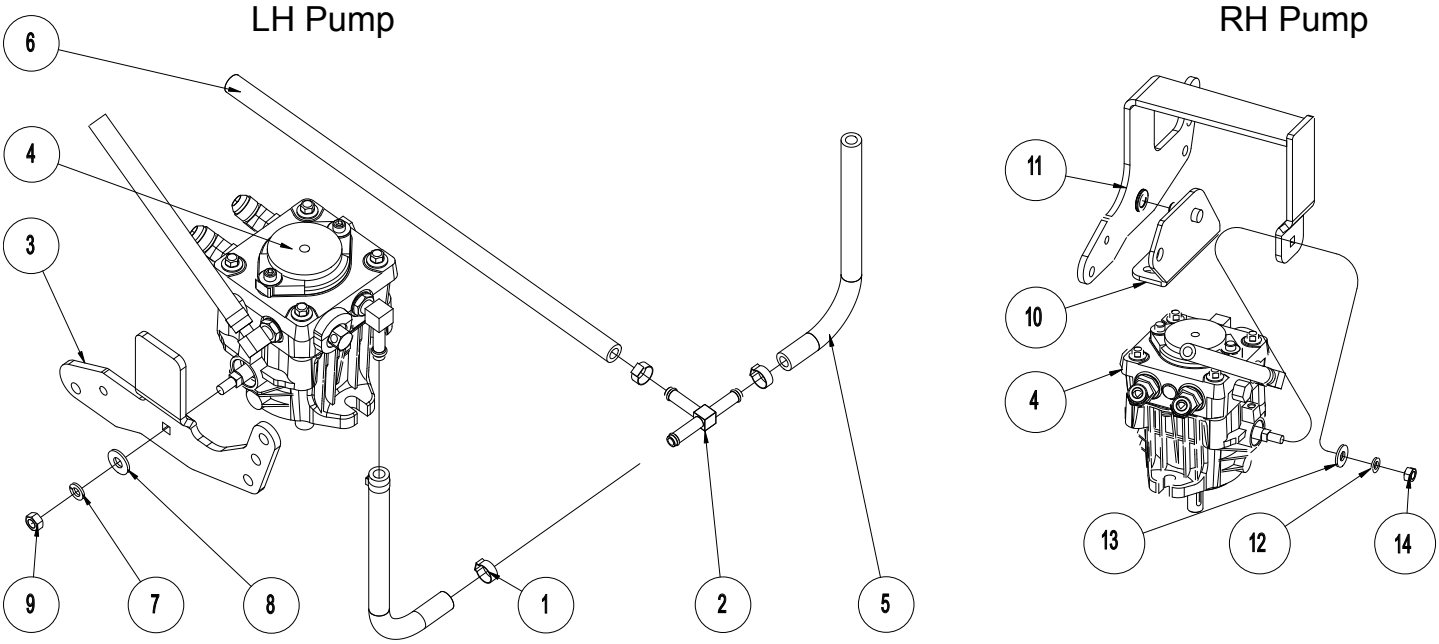

PUMP COMPONENTS

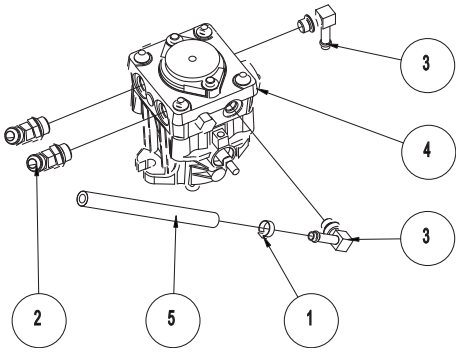

PUMP ASSEMBLY

ITEM	PART NO	QTY	DESCRIPTION
1	D18379	4	CLAMP, HOSE
2	M86863	1	FTG, TUN 3/8 HOSE
3	200403	1	PLATE, PUMP ARM
4	200437	1	ASSY, SCAMPER PUMP
5	200455	2	HOSE, HYD 3/8 X 6.00
6	200456	1	HOSE, HYD 3/8 X 17.00
7	960601	1	WASHER, .313 MED SPRG LOCK Y
8	960701	1	WASHER, .313 REG FLAT Y
9	964003	1	NUT, 5/16-24 STD HEX GR5 Y
10	D15010	1	WLDT, ROTATIONAL MOUNT BRACKET
11	200439	1	ASSY, RH SCAMPER PUMP ARM
12	960601	1	WASHER, .313 MED SPRG LOCK Y
13	960701	1	WASHER, .313 REG FLAT Y
14	964003	1	NUT, 5/16-24 STD HEX GR5 Y

PUMP COMPONENTS

ITEM	PART NO	QTY	DESCRIPTION
1	D18379	1	CLAMP, HOSE
2	D24018	2	FTG, 45 3/4MJIC X 3/4MOR 6802
3	D24028	2	FTG, 90 9/16 MOR X 3/8 HOSE
4	200416	1	PUMP, HYDRO PG-1GRQ
5	200457	1	HOSE, HYD 3/8 X 8.00

WHEEL MOTOR ASSEMBLY

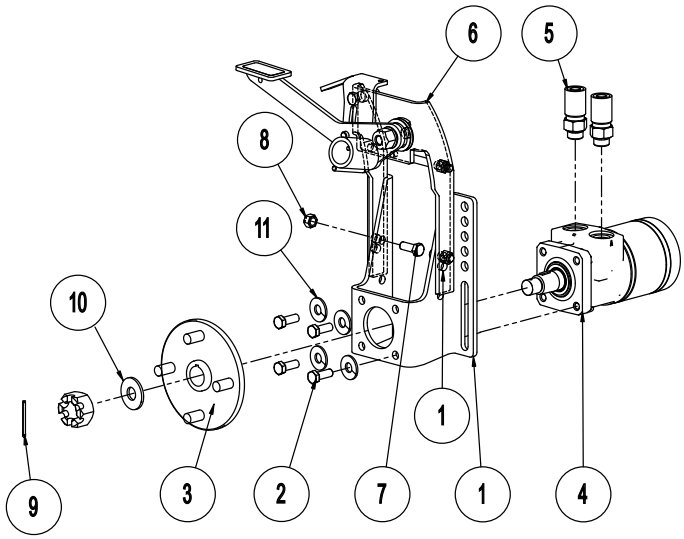

BRAKE ASSEMBLY

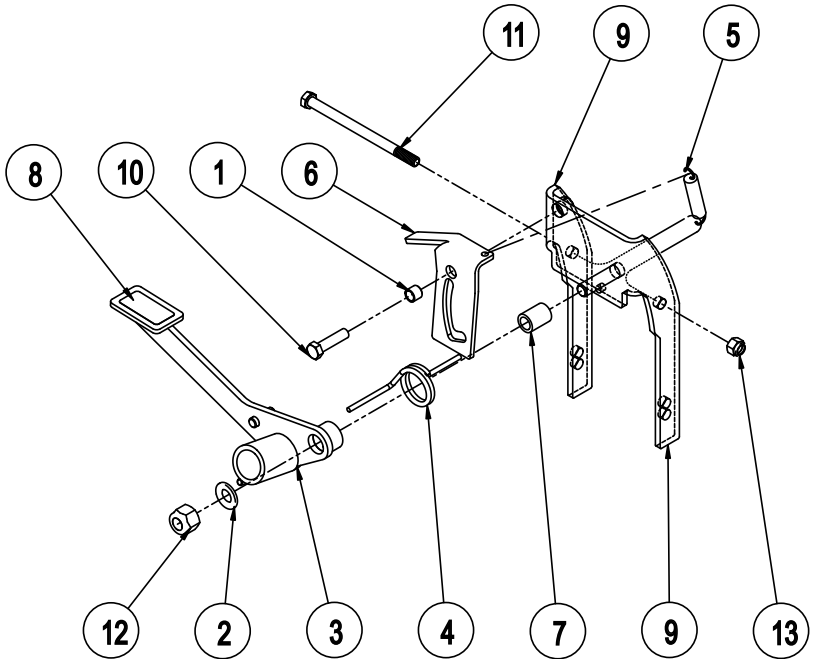

WHEEL MOTOR ASSEMBLY/BRAKE ASSEMBLY

WHEEL MOTOR ASSEMBLY

ITEM	PART NO	QTY	DESCRIPTION
1	D12062	2	BRACKET, MOTOR MOUNT
2	D14280	8	BOLT, 3/8-16 X 1 GR8 BLACK
3	D18110	2	HUB, REAR WHEEL (18 X 8.5)
4	D18311	2	MOTOR, HYDRAULIC WHEEL
5	D38020	4	HOSE, HIGH PRESSURE HYDRO
6	N/A	1	ASSY, BRAKE
7	960046	2	BOLT, 3/8-16 X 1.00 HEX 5 Y
8	964022	2	LOCKNUT, 3/8-16 CROWN Y
9	962019	2	PIN, COT .125 X 1.50 EXTP Y
10	150052	2	BUSHING, MACHINERY .750 X 1.25 X .048
11	960602	4	LOCKWASHER, 3/8 MEDIUM SPRING

BRAKE ASSEMBLY

ITEM	PART NO	QTY	DESCRIPTION
1	D13039	1	BUSHING, .402 X .500 X .410
2	D14105	1	WASHER
3	D15048	1	WLDT, RH BRAKE PEDAL
4	D18138	1	SPRING RH TORSION PARKING BRAK
5	D18140	1	SPRING
6	D32068	1	LATCH, RH SC BRAKE
7	182076	1	BUSHING, .516 X .750 X 1.00
8	200401	1	TAPE, TRACTION - 1.00 X 2.00
9	D35034	1	WLDT, BRAKE BRACKET
10	960048	1	BOLT, 3/8-16 X 1.50 HEX 5 Y
11	960063	1	BOLT, 3/8-16 X 5.50 HEX 5 Y
12	964015	1	LOCKNUT, 1/2-13 NYLOC Y
13	968087	1	LOCKNUT, 3/8-16 NYLOC Y

HANDLE ASSEMBLY

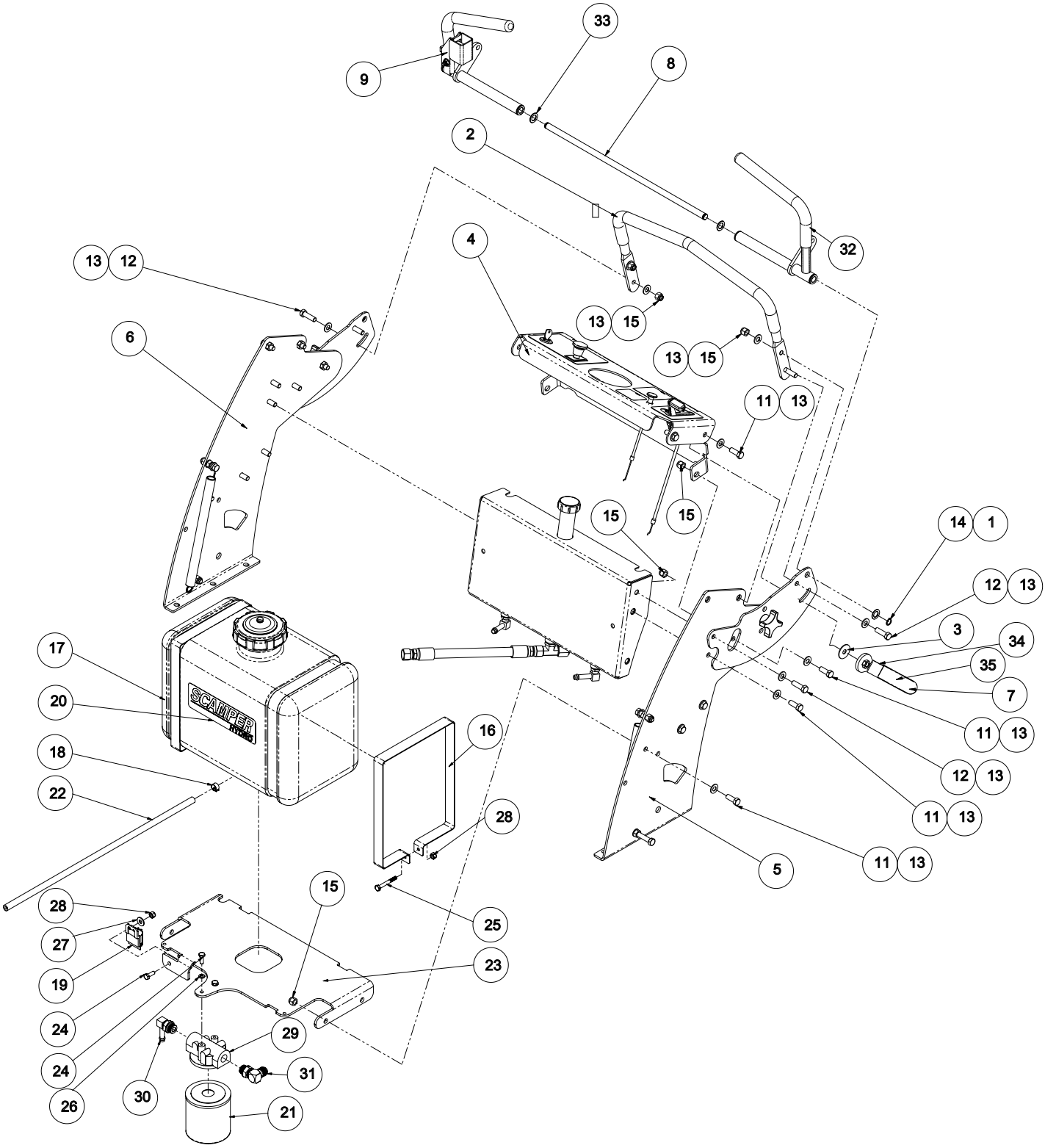

HANDLE ASSEMBLY

ITEM	PART NO	QTY	DESCRIPTION
1	D14248	2	BUSHING, MACH .500 X .875 X .048 Y
2	D38026	1	HANDLE, SCAMPER
3	180961	1	WASHER, .400 X 1.27 X .062 NYLON
4	N/A	1	ASSY, INSTRUMENT PANEL
5	N/A	1	ASSY, LH SCAMPER UPRIGHT
6	N/A	1	ASSY, RH SCAMPER UPRIGHT
7	200443	1	ASSY, CONTROL LOCK HANDLE W/GRIP
8	D33010	1	ROD, CONTROL LEVER PIVOT
9	N/A	1	ASSY, LH CONTROL
10	200447	1	ASSY, SCAMPER CONTROL HANDLE
11	960046	14	BOLT, 3/8-16 X 1.00 HEX 5 Y
12	960047	5	BOLT, 3/8-16 X 1.25 HEX 5 Y
13	964501	22	WASHER, .406 X .813 X .065 FLAT Y
14	967290	2	SNAP RING, .500 X .035 EXT U
15	968087	11	LOCKNUT, 3/8-16 NYLOC Y
16	D32024	2	STRAP, SC TANK
17	200556	1	ASSY, 5 GALLON FUEL TANK
18	130924	1	CLAMP, HOSE - 1/2" SPRING
19	200410	1	MODULE, ELECTRIC
20	200420	1	DECAL, SCAMPER
21	GDA10137	1	OIL FILTER, HYDRAULIC
22	200458	1	HOSE, FUEL 1/4 X 21.25
23	200465	1	BRACKET, TANK SUPPORT
24	960001	3	BOLT, 1/4-20 X .750 HEX 5
25	960003	2	BOLT, 1/4-20 X 2.00 HEX 5
26	960600	2	WASHER, .250 MED SPRING LOCK
27	960700	1	WASHER, .250 REG FLAT Y
28	964048	3	LOCKNUT, 1/4-20 NYLOC Y
29	200463	1	HEAD, OIL FILTER
30	200464	1	FTG, 90 BRB-OR 4601-06-08
31	230668	1	FTG, 90 3/4 MOR X 3/4 MJIC
32	200451	1	ASSY, RH CONTROL HANDLE
33	D14248	1	BUSHING, MACH .500 X .875 X .048
34	D15028	1	WDT, SPEED CONTROL LOCK LEVER
35	D18079	1	GRIP, PVC .250 X 1.00 X 3.63

LH Control Handle Assembly

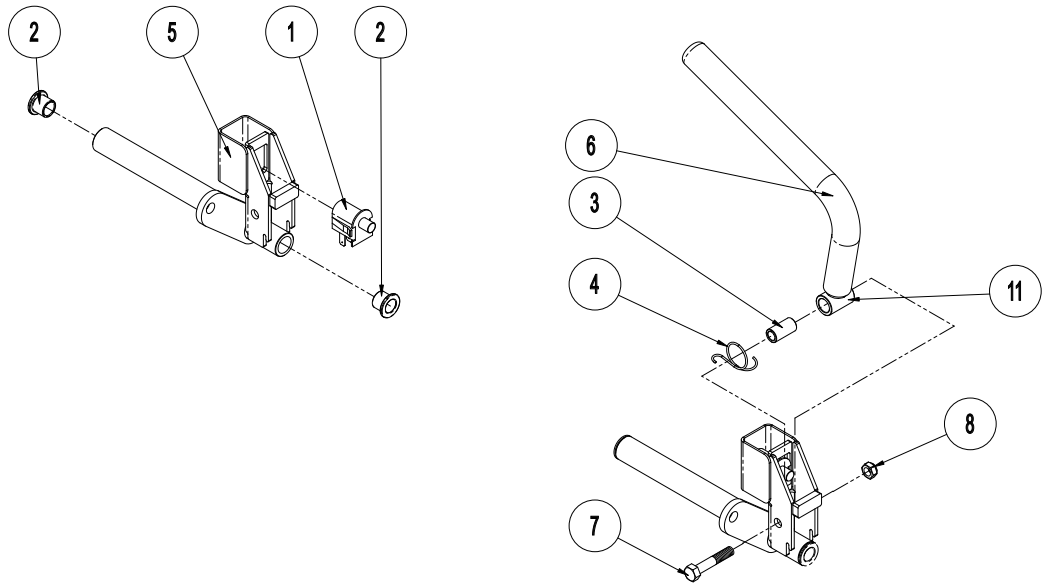

RH Control Handle Assembly

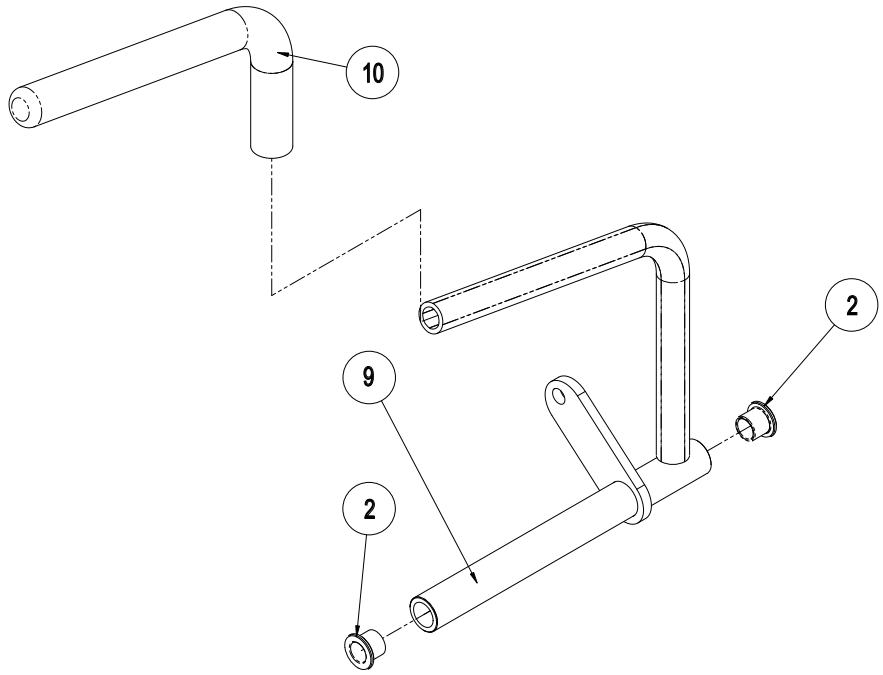

CONTROL HANDLE ASSEMBLY

ITEM	PART NO	QTY	DESCRIPTION
1	AM103119	1	SWITCH, SEAT OVER RIDE (N.O.)
2	D18013	4	BRG, FLG .500 X .625 X .500 BRNZ
3	D33004	1	SPACER, .330 X .500 X .980
4	D38003	1	SPRING, TOR 1.00 X .062 Y
5	200407	1	WLDT, LH HANDLE MOUNT
6	200450	1	ASSY, OPERATOR PRESENCE HNDL (INCLUDES GRIP)
7	960026	1	BOLT, 5/16-18 X 1.75 HEX 5 Y
8	967115	1	LOCKNUT, 5/16-18 NYLOC Y
9	200408	1	WLDT, RH DRIVE LEVER
10	D18093	1	GRIP, CONTROL
11	D35037	1	WLDT, LH DRIVE LEVER

INSTRUMENT PANEL ASSEMBLY

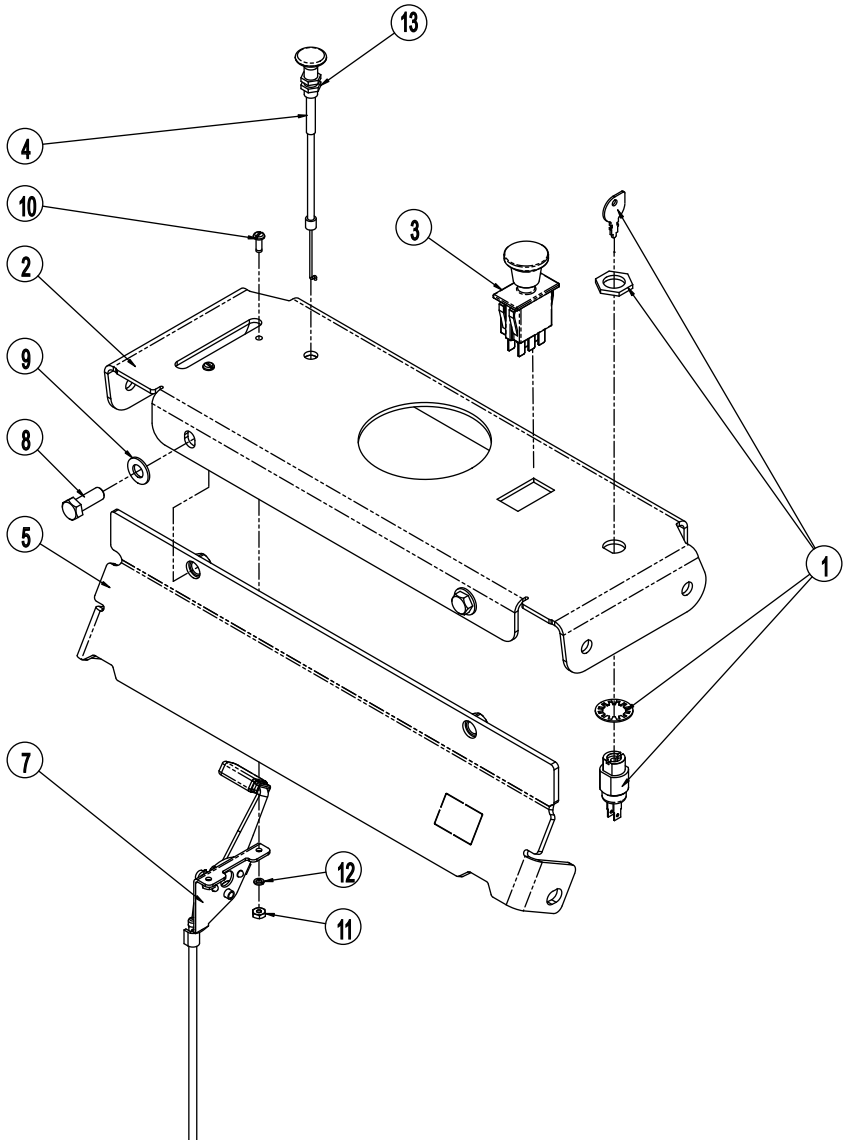

INSTRUMENT PANEL ASSEMBLY

ITEM	PART NO	QTY	DESCRIPTION
1	D18090	1	SWITCH, TWO POSITION KEY
2	200542	1	CONSOLE, SCAMPER
3	136574	1	SWITCH, PTO ENGAGEMENT
4	180273	1	CABLE, CHOKE 48"
5	200543	1	WLDT, HANDLE BRACE
6	200411	1	HARNESS, WIRE - SCAMPER
7	200413	1	CABLE, THROTTLE - 49.5
8	960046	2	BOLT, 3/8-16 X 1.00 HEX 5 Y
9	964501	2	WASHER, .406 X .813 X .065 FLAT Y
10	967036	2	SCREW, #8-32 X .500 RD HD MACH Y
11	967037	2	NUT, 8-32 STD HEX Y
12	967038	2	WASHER, #8 MED SPRG LOCK Y
13	14H846	1	NUT, 3/8 UNF 5

UPRIGHT ASSEMBLY

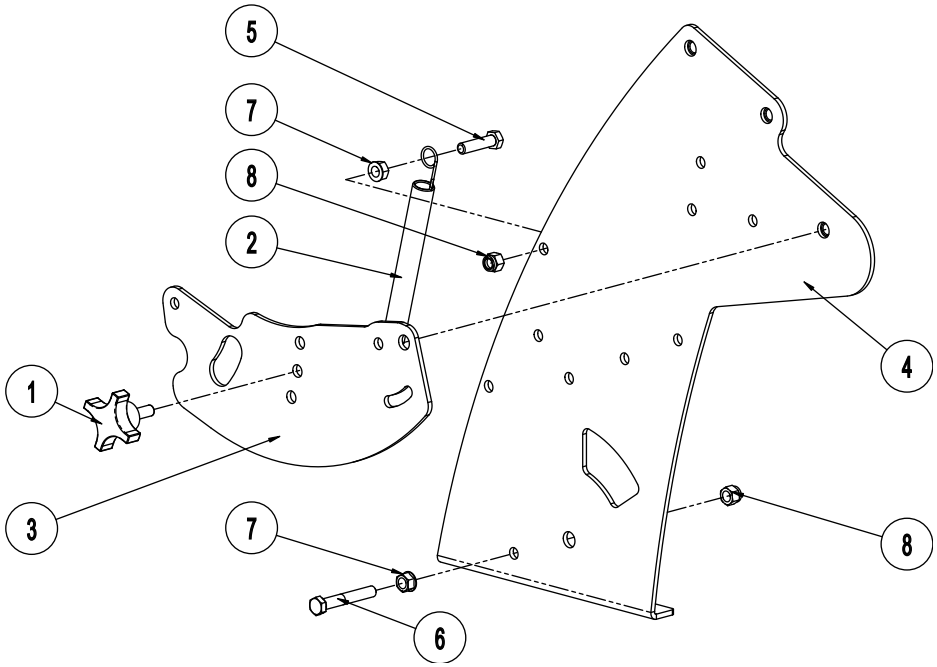

HYDRAULIC TANK ASSEMBLY

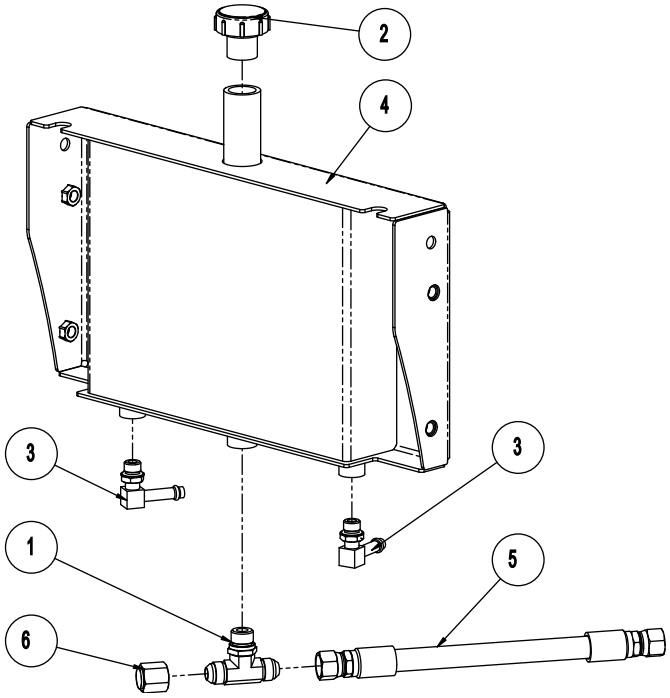

UPRIGHT ASSEMBLY

ITEM	PART NO	QTY	DESCRIPTION
1	D18047	1	KNOB, STAR 3/8-16 X 1.00
2	D18072	1	SPRING, EXT
3	D32061	1	BRACKET, ADJUSTABLE HANDLE
4	D35041	1	WLDT, LH SUPPORT BRACKET
N/I	D35042	1	WLDT, RH SUPPORT BRACKET
5	960048	1	BOLT, 3/8-16 X 1.50 HEX 5 Y
6	960052	1	BOLT, 3/8-16 X 2.50 HEX 5 Y
7	964016	2	LOCKNUT, 3/8-16 WHIZ Y
8	968087	2	LOCKNUT, 3/8-16 NYLOC Y

HYDRAULIC TANK ASSEMBLY

ITEM	PART NO	QTY	DESCRIPTION
1	D14199	1	FTG, TMB JIC-OR 6803-08-08-08
2	D18333	1	CAP, OIL FILL BREATHER
3	D24028	2	FTG, 90 9/16 MOR X 3/8 HOSE
4	D35031	1	WLDT, TANK
5	D38033	1	HOSE, HYD-8 -12FJIC 12
6	231281	1	CAP, 3/4-16 JIC

36” DECK ASSEMBLY

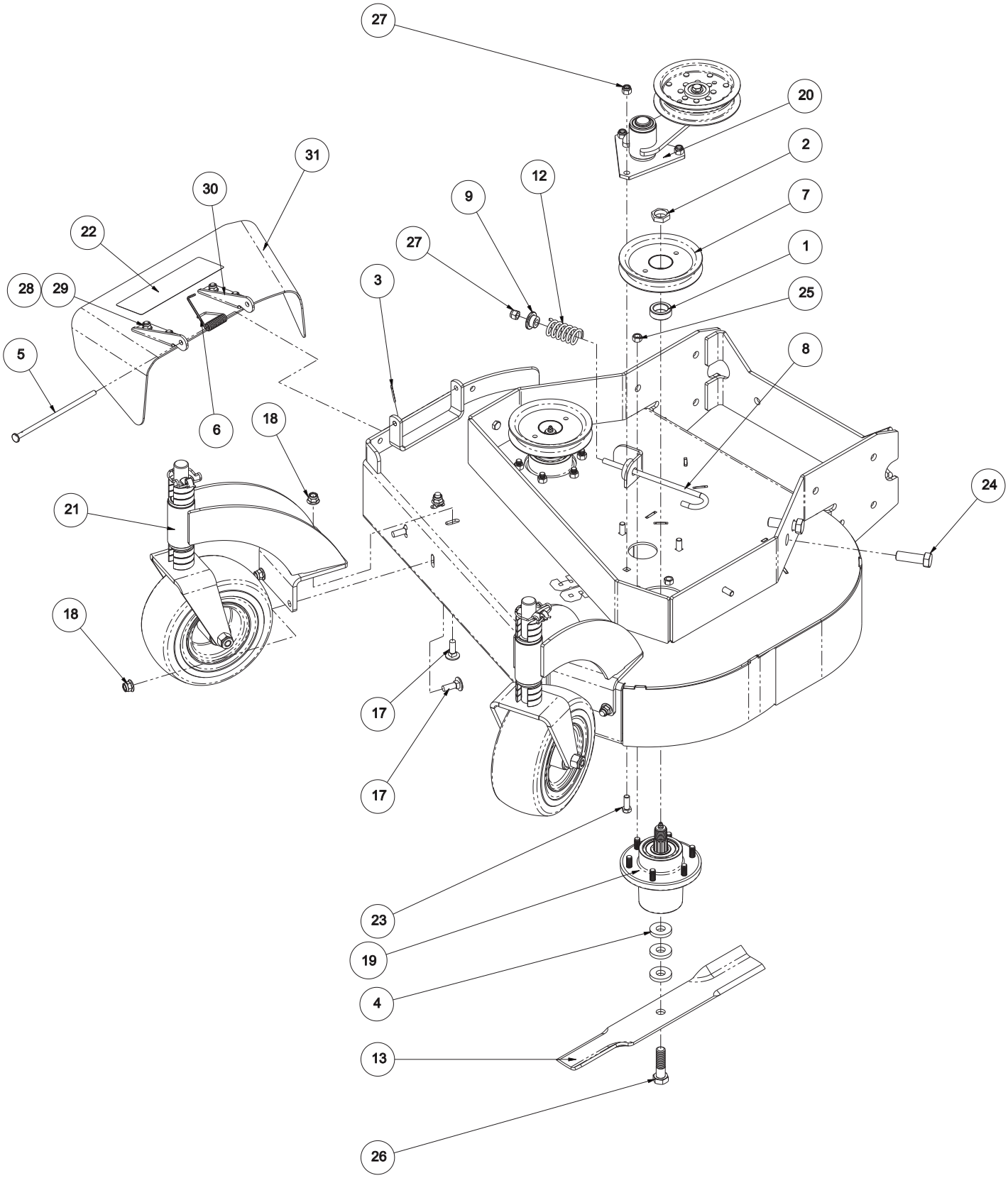

36” DECK ASSEMBLY

ITEM	PART NO	QTY	DESCRIPTION
1	D13024	2	SPACER, 1.500X1.000X.510 Y
2	D13055	2	NUT, 7/8-14
3	D14107	1	PIN, COT .094 X .750 EXTP Y
4	D18055	6	WASHER, BLADE
5	D18060	1	PIN, DISCHARGE CHUTE
6	D18077	1	SPRING, DISCHARGE CHUTE
7	D18084	2	PULLEY, SPLINE SPINDLE OFFSET
8	D23040	1	J-BOLT, 3/8-16 X 7.88 Y
9	D33062	1	KEEPER, SPRING
10	200547	1	WLDT, 36" SCAMPER DECK
11	D38056	1	DECAL, 36" LOGO
12	D38128	1	SPRING, COM 1.22X.162X2.50 Y
13	GDU10231	2	BLADE, 18"
14	M131739	1	DECAL, DANGER
15	M137637	1	DECAL, DANGER
16	TCU51051	2	DECAL, WARNING
17	03M7085	8	BOLT,RH,SQNECK,DIN603,M10X1.5X
18	14M7400	8	LOCKNUT,FL,ISO7043,M10X1.5-10-
19	200041	2	ASSY, SPINDLE HOUSING
20	N/A	1	ASSY, DECK TENSIONER
21	N/A	2	ASSY, FRONT WHEEL
22	M31748	1	DECAL, DANGER - THROWN OBJECT
23	960046	3	BOLT, 3/8-16 X 1.00 HEX 5 Y
24	960156	2	BOLT, 5/8-11 X 2.00 HEX 5 Y
25	960502	12	NUT, 3/8-16 STD HEX GR5 Y
26	967347	2	BOLT, 5/8-11 X 2.25 HEX 8 Y
27	968087	4	LOCKNUT, 3/8-16 NYLOC Y
28	03M7184	4	BOLT, M8 X 1.25 X 20 CRG 8.8 Y
29	14M7396	4	LOCKNUT, FL, ISO7043 M8X1.25
30	D12006	2	HINGE, CHUTE
31	D12007	1	SHIELD, DISCHARGE CHUTE

48” DECK ASSEMBLY

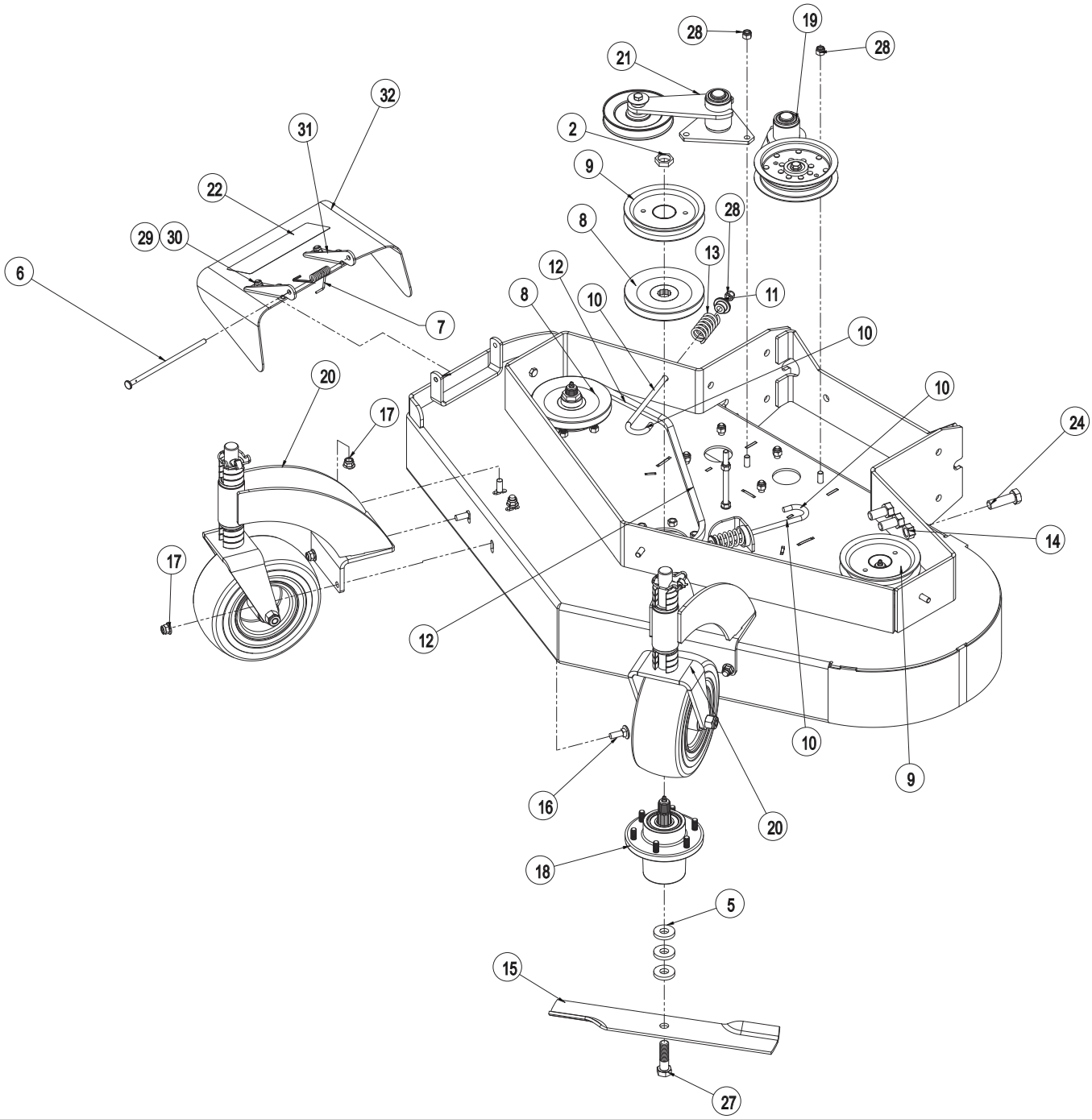

48” DECK ASSEMBLY

ITEM	PART NO	QTY	DESCRIPTION
1	D13024	2	SPACER, 1.500X1.000X.510 Y
2	D13055	3	NUT, 7/8-14
3	D14107	1	PIN, COT .094 X .750 EXTP Y
4	D14237	1	BOLT, 3/8-16X5.00 TAP
5	D18055	9	WASHER, BLADE
6	D18060	1	PIN, DISCHARGE CHUTE
7	D18077	1	SPRING, DISCHARGE CHUTE
8	D18083	2	PULLEY, V-BELT 5.75 DRIVE PNTS
9	D18084	2	PULLEY, SPLINE SPINDLE OFFSET
10	D23040	2	J-BOLT, 3/8-16 X 7.88 Y
11	D33062	2	KEEPER, SPRING
12	D38019	1	BELT, HB 55.1 EL AMD
13	D38128	2	SPRING, COM 1.22X.162X2.50 Y
14	200554	1	WLDT, 48" DECK
15	GDU10230	3	BLADE, 16.50 LO-LIFT
16	03M7085	8	BOLT,RH,SQNECK,DIN603,M10X1.5X
17	14M7400	8	LOCKNUT,FL,ISO7043,M10X1.5-10-
18	200041	3	ASSY, SPINDLE
19	200452	1	ASSY, DECK TENSIONER
20	200453	2	ASSY, FRONT WHEEL
21	200490	1	ASSY, 48" DECK TENSIONER
22	M131748	1	DECAL, DANGER - THROWN OBJECT
23	960046	6	BOLT, 3/8-16 X 1.00 HEX 5 Y
24	960156	3	BOLT, 5/8-11 X 2.00 HEX 5 Y
25	960502	18	NUT, 3/8-16 STD HEX GR5 Y
26	964016	1	LOCKNUT, 3/8-16 WHIZ Y
27	967347	3	BOLT, 5/8-11 X 2.25 HEX 8 Y
28	968087	9	LOCKNUT, 3/8-16 NYLOC Y
29	03M7184	4	BOLT, M8 X 1.25 X 20 CRG 8.8 Y
30	14M7396	4	LOCKNUT, FL, ISO7043 M8X1.25
31	D12006	2	HINGE, CHUTE
32	200541	1	SHIELD, 36” DISCHARGE CHUTE
	200552	1	SHIELD, 48” DISCHARGE CHUTE

SPINDLE ASSEMBLY

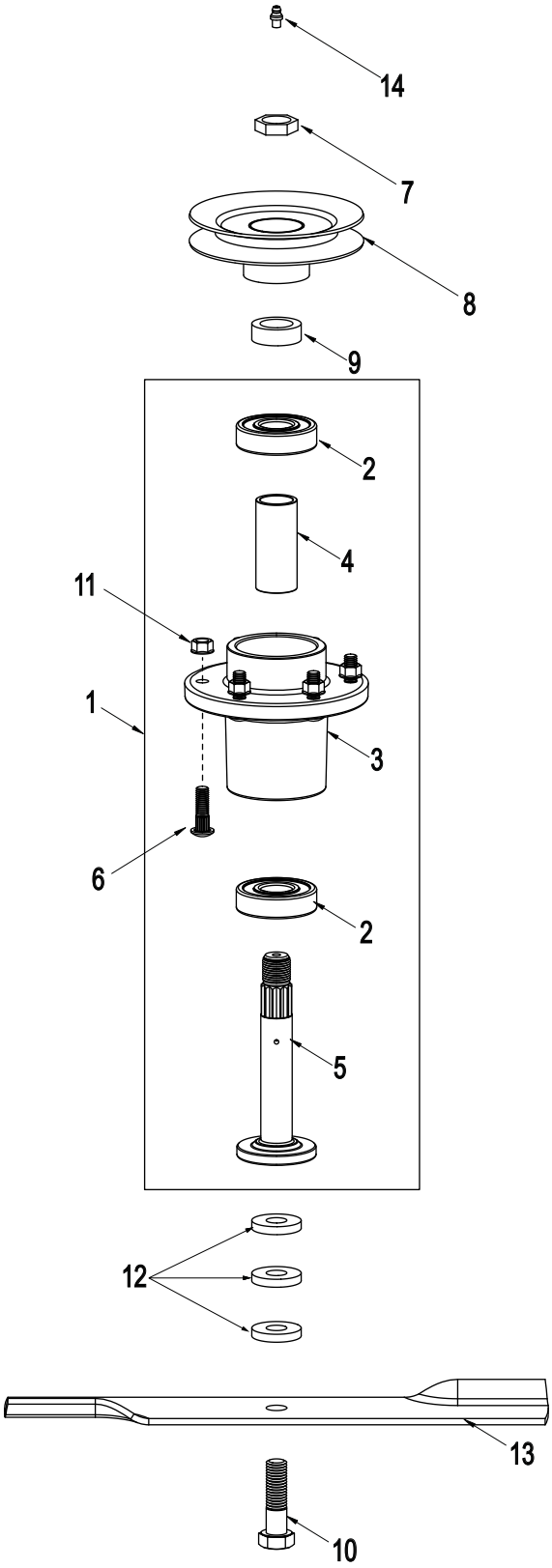

SPINDLE ASSEMBLY

ITEM	PART NO	QTY	DESCRIPTION
1	200041	1	Spindle Assembly - Includes items 2, 3, 4, 5, 6, 14
2	200046	2	Ball Bearing
3	200042	1	Housing
4	200044	1	Spacer - 1.000 x 1.250 x 2.772
5	200043	1	Shaft, Spindle
6	200045	6	Bolt, 3/8-16 x 1.25 Rib
7	D13055	3	Nut, Pulley (Special)
8	N/A	3	Pulley, Cutter Housing - See Mower Assembly Pages
9	D13024	3	Spacer, Pulley
10	967347	3	Bolt, Blade - 5/8-11 x 2.25 Grade 8
11	960502	18	Nut, 3/8-16 Std Hex Gr5
12	D18055	9	Spacer, Blade Bolt
13	GDU10230	3	16.5" Blade, 36" Deck
	GDU10231	3	18.0" Blade, 48" Deck
14	200047	1	Zerk, Grease S/O

DECK TENSIONER ASSEMBLY/FRONT WHEEL ASSEMBLY

DECK TENSIONER ASSEMBLY

36” & LH 48” DECK

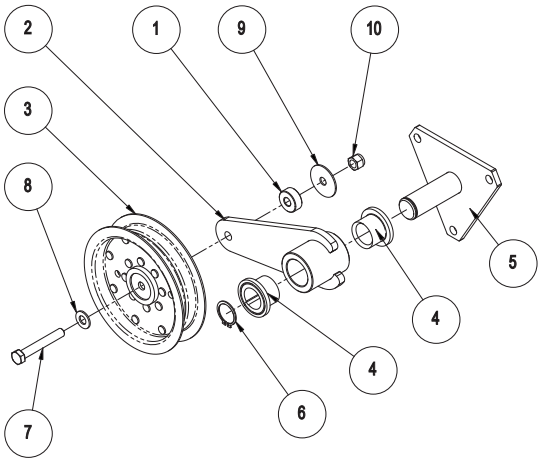

RH 48” DECK TENSIONER ONLY

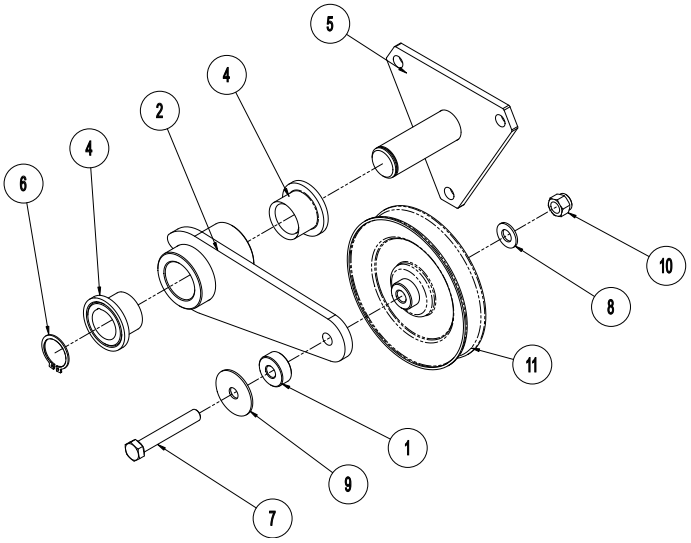

FRONT WHEEL ASSEMBLY

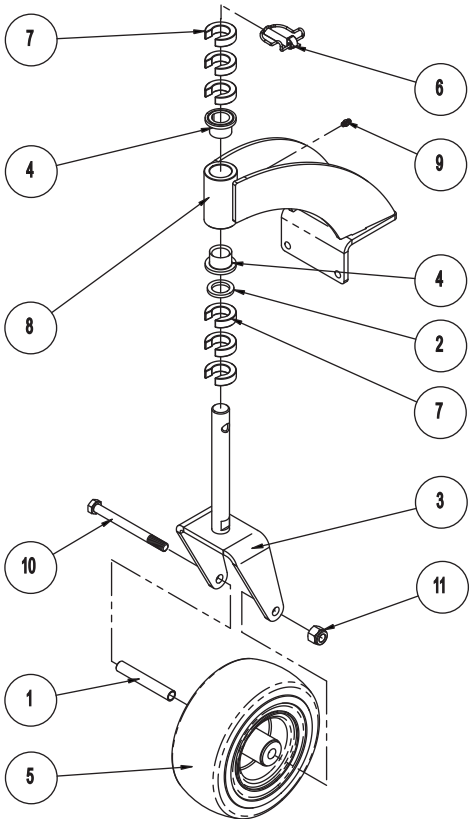

DECK TENSIONER ASSEMBLY/FRONT WHEEL ASSEMBLY

DECK TENSIONER ASSEMBLY

ITEM	PART NO	QTY	DESCRIPTION
1	D13023	1	BUSHING, .380 X 1.00 X .410 Y
2	D15032	1	WLDT, IDLER ARM
3	D18032	1	IDLER PULLEY, ENG TO CUTTER DE
4	D18076	2	BRG, FLG 1.00X1.25X1.00
5	GDA10036	1	PIVOT, IDLER MOUNTING, WELDMEN
6	424390	1	SNAP RING, 1.00 X .042 EXT
7	960052	1	BOLT, 3/8-16 X 2.50 HEX 5 Y
8	964501	1	WASHER, .406 X .813 X .065 FLAT Y
9	964502	1	WASHER, .375 X 1.50 X .O63 FLAT Y
10	968087	1	LOCKNUT, 3/8-16 NYLOC Y
11	D18031	1	PULLEY, V-BELT 5.0

FRONT WHEEL ASSEMBLY

ITEM	PART NO	QTY	DESCRIPTION
1	D13003	1	TUBE, CASTER AXLE
2	D13008	1	BUSHING, 1.03 X 1.50 X .179 Y
3	D15030	1	WLDT, CASTER YOKE
4	D18076	2	BRG, FLG 1.00X1.25X1.00
5	D38034	1	WHEEL & TIRE ASSY 9 X 3.5
6	161397	1	PIN, LNC .438 X 2.00 Y
7	164145	6	C-SPACER, 1.00 X 1.77 X .500
8	GDA10105	1	WLDT, CASTER SUPPORT
9	959995	1	FTG, 1/4-28 STRGT GREASE ZERK
10	960129	1	BOLT, 1/2-13 X 5.50 HEX 5 Y
11	964015	1	LOCKNUT, 1/2-13 NYLOC Y

DECAL LOCATIONS

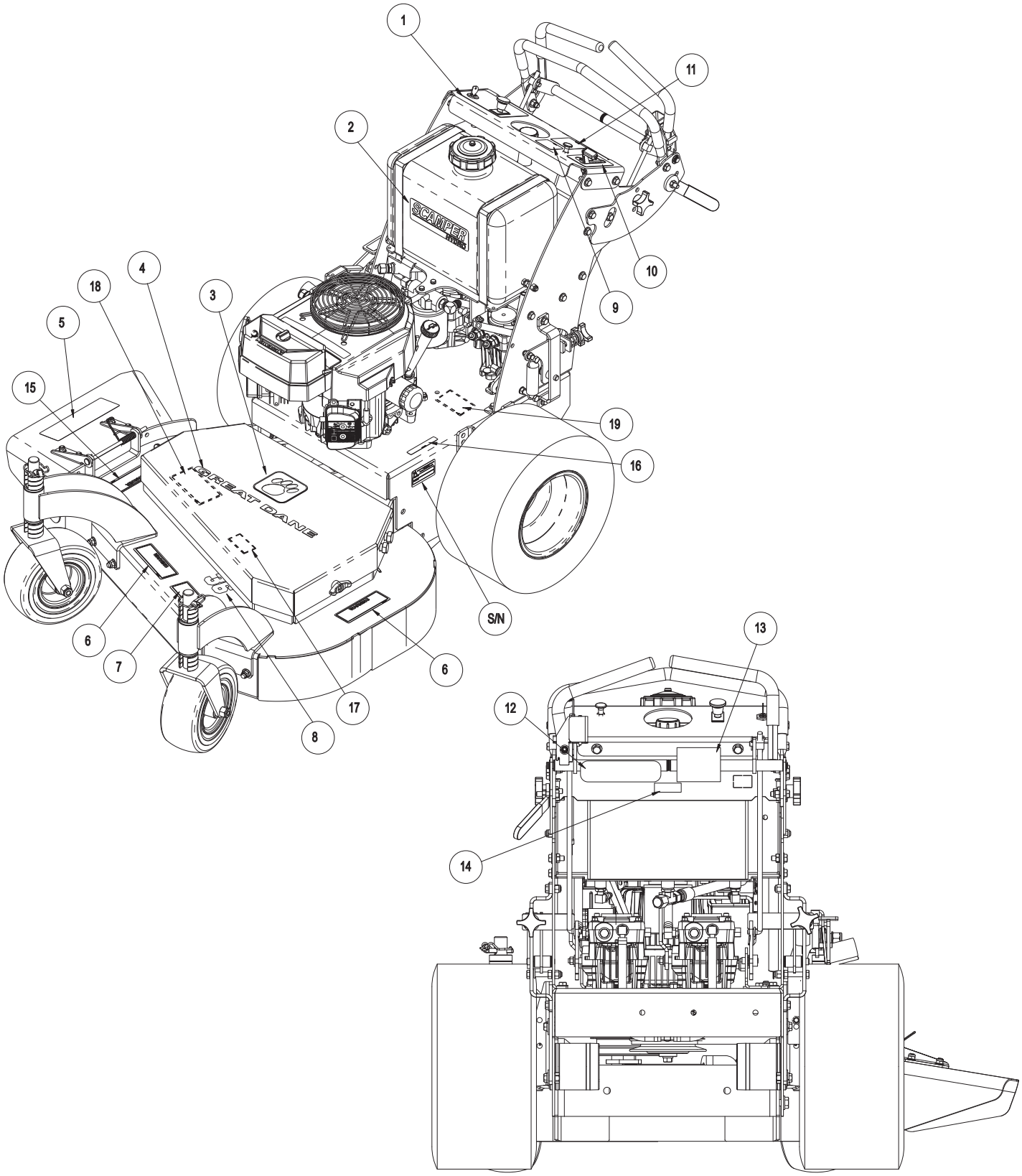

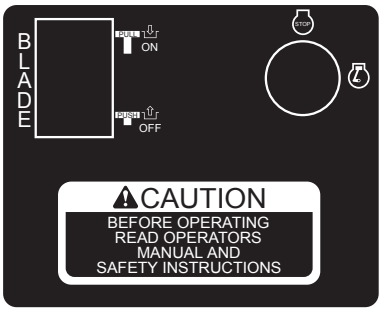

1. TCU16481

2. 200420

3. GDU10256

GREAT DANE

4. GDU10257

6. TCU51051

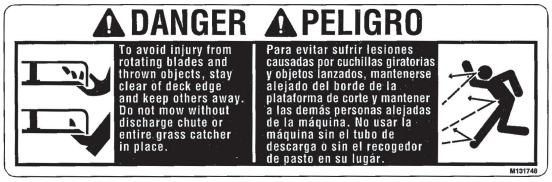

5. M131748

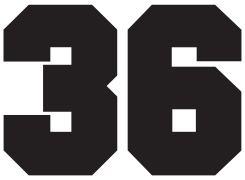

8. D38056 - 36”
GDU10267 - 48”

9. D18023

7. M131739

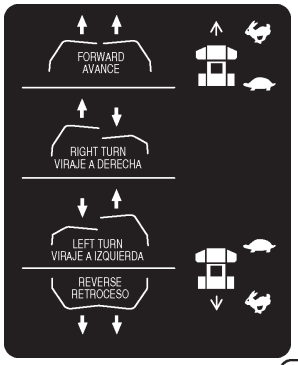

11. TCU15910

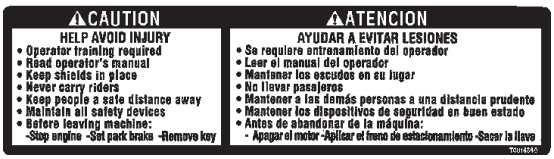

12. TCU14840

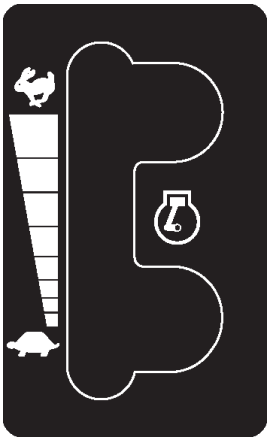

10. D18021

13. TCU15907

14. M117554

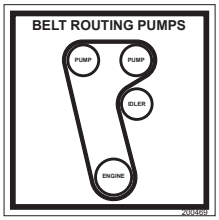

17. 200469

15. 160169

U.S. Patent No. 5,343,678

16. TCU17047

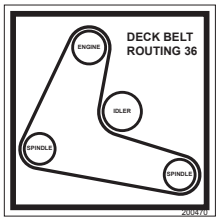

18. 200470